AQT-NX

ELECTRONIC SERIES

AQUATROL™
CONTROL VALVES

PROGRAMMING MANUAL

TABLE OF CONTENTS

General Residential Installation	3
AQT-NX Keypad	4
NX Programming	5
NX Features - Regeneration Modes	14
NX Controller Assembly & Parts List	16
DLFC Assembly & Parts List	17
AQT-275 Body Valve Assembly	18
AQT-275 Body Valve Assembly Parts List	19
AQT-275 Control Drive Assembly	20
AQT-275 Control Drive Assembly Parts List	21
AQT-285 Body Valve Assembly	22
AQT-285 Body Valve Assembly Parts List	23
AQT-285 Control Drive Assembly	24
AQT-285 Control Drive Assembly Parts List	25
AQT-290 Body Valve Assembly	26
AQT-290 Body Valve Assembly Parts List	27
AQT-290 Upper Control Drive Assembly	28
AQT-290 Upper Control Drive Assembly Parts List	29
AQT-290 Lower Control Drive Assembly	30
AQT-290 Lower Control Drive Assembly Parts List	31
AQT-315 Body Valve Assembly	32
AQT-315 Body Valve Assembly Parts List	33
AQT-315 Control Drive Assembly	34
AQT-315 Control Drive Assembly Parts List	35
AQT-390 Body Valve Assembly	36
AQT-390 Body Valve Assembly Parts List	37
AQT-390 Upper Control Drive Assembly	38
AQT-390 Upper Control Drive Assembly Parts List	39
AQT-390 Lower Control Drive Assembly	40
AQT-390 Lower Control Drive Assembly Parts List	41
160 Brine System Assembly	42
160 Brine System Assembly Parts List	43
170 Brine System Assembly	44
170 Brine System Assembly Parts List	45
180 Brine System Assembly	46
180 Brine System Assembly Parts List	47
AQT-275-NXMETER, 1" Meter Assembly & Parts List	48
AQT-285-NXMETER, 1.5" Meter Assembly & Parts List	49
AQT-290-NXMETER / AQT-315-NXMETER, 2" Meter Assembly & Parts List	50
AQT-390-NXMETER, 3" Meter Assembly & Parts List	51
Wiring Diagrams	52
NX Systems Classification	54
NX Systems Installation Diagrams	55
Troubleshooting	56

AQUATROL™
CONTROL VALVES

Water Pressure	Minimum 25 PSI
Electrical Supply	Uninterrupted AC. Check voltage compatibility
Existing	Free of any deposits or build-ups inside pipes
Softener	Locate close to drain and connect according to plumbing codes
Bypass Valves	Always provide for bypass valve if unit is not equipped with one

CAUTION	
WARNING	Do not exceed 120 PSI water pressure
	Do not exceed 100°F water temperature
	Do not subject unit to freezing conditions

Installation Instructions

1. Place the softener tank where you want to install the unit making sure the unit is level and on a firm base. (Maximum 4 feet apart for twin units.)
2. All plumbing should be done in accordance with local plumbing codes. The pipe size for the drain line should be the same size as the drain line flow control female connection. Water meters are to be installed on soft water outlets. Twin units with (1) one meter shall be installed on common soft water outlets of units.
3. Solder joints near the drain must be done prior to connecting the Drain Line Flow Control fitting. Leave at least 6" between the DLFC and solder joints when soldering when the pipes are connected on the DLFC. Failure to do this could cause interior damage to the DLFC.
4. Teflon tape is the only sealant to be used on the drain fitting. The drain from twin units may be run through a common line.
5. Make sure that the floor is clean beneath the salt storage tank and that it is level
6. Place approximately 1" of water above the grid plate (if used) in your salt tank. Salt may be place in the unit at this time.
7. On units with by-pass, place in by-pass position. Turn on main water supply. Open a cold soft water tap nearby and let run a few minutes or until the system is free from foreign material (usually solder) that may have resulted from the installation.
8. Place the by-pass in service position.
9. Manually index the softener control into "service" position and let water flow into the mineral tank. When water flow stops, open a cold water tap nearby and let run until air pressure is relieved.
10. Electrical: All electrical connections must be connected according to codes. Use electrical conduit if applicable. See Wiring Diagram section for more information.
11. Plug into power supply

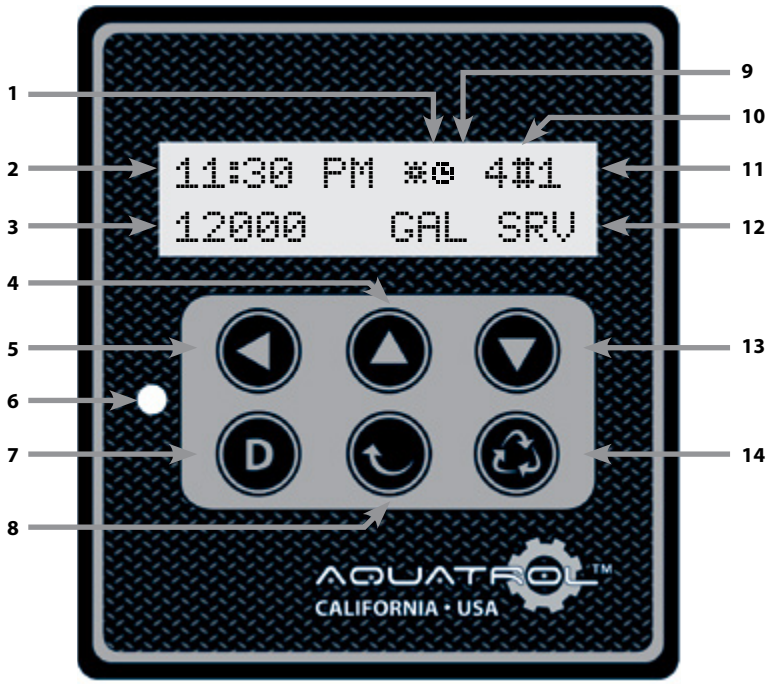

1. Flow Indicator
2. Time Of Day
3. Volume Remaining
4. Up Button
5. Shift Button
6. Status LED
7. Diagnostic Button
8. Page Up Button
9. Timer Indicator
10. System Number
11. Valve Address
12. Valve State
13. Down Button
14. Extra Cycle Button

Diagnostic Button

1. Enter diagnostic mode. Check current flow, peak flow, total flow, time interval between the last two generations, time since the last generation, volume remaining, valve position, error signal, software version.
2. Exit without saving the data.

Up Button

1. Adjust the settings(add or cycle).
2. Use simultaneously with shift button to enter programming.
3. Use simultaneously with down button to enter user mode.

Down Button

1. Adjust the settings (add or cycle).

Shift Button

1. Move cursor to left.

Page Up (current time) Button

1. Enter to set the time of day.
2. Back to the last menu option.

Extra Cycle Button

1. Confirm the current setting and enter the next menu option.
2. Enter queued regeneration mode.
3. Press and hold for 5-6 seconds to initiate regeneration immediately.
4. Terminate current regeneration step and go to the next step.

Valve Status

SRV (service position) - Displayed when the unit is in service
CHG(Status changes) - Dual-piston unit. Displayed when the lower drive changes from service position to regeneration position.
RGQ (Queued regeneration) - Displayed when the unit is in queued regeneration.
LCK (Locked status) - Displayed when the unit is locked by remote signal

Valve Status LED

Blue - The unit is in service; Blinking blue indicates the unit queued for regeneration.
Green - The unit is in regeneration; Blinking green indicates the unit is on stand-by.
Red - The unit is in error.

Flow Indicator

A rotating star will display when the water flows through the meter.

Users Parameter setting

Press and hold both button for 5 seconds.

Press button to confirm the setting and enter next step; Press button to turn back to the last step for modification.

Use button or button to change, use button to move the cursor to left. Press button to exit without saving the data.

Language

```
SELECT LANGUAGE:
ENGLISH
```

Option:
English
Spanish

System Number

```
SYSTEM TYPE:
SINGLE UNIT 4
```

Option:
System 4 (Single Valve) (Default)
System 5 (Interlock, 2-4 valves)
System 6 (Series, 2-4 valves)
System 7 (Alternating, 2 valves)
System 9 (Alternating, 2-4 valves)

Valve Address

```
VALVE ADDRESS:
1
```

Option:
Valve address #1 (First Valve)
Valve address # 2(Second valve) (Default)
Valve address # 3(Third Valve)
Valve address # 4(Fourth Valve)

Valve Quantity

```
SYSTEM SIZE:
2
```

Option:
2 valves--(default)
3 valves
4 valves(the fourth valve)

Regeneration Mode

```
REGEN TYPE:
TIME CLOCK
```

Option:
Timer (System 4# ONLY) (Default)
Meter IMM
Meter Delay

Valve Model

Option:
AQT-275, AQT-285, AQT-290, AQT-315, AQT-390 (Default)

Regeneration Flow Direction

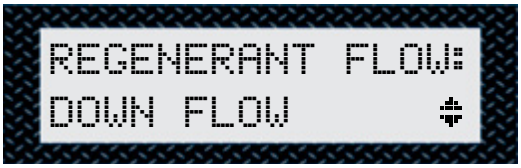

Option:
Down Flow (Default)
UF Brine Draw

Remote Signal Control

Option:
OFF (Default)
Range:
00:01 to 01:39 (HH: MM)

Flow Unit

Option:
Liters - Metric System (Default)
Gallons - American System

Unit Capacity

Option:
G CaCo3 (Default)
Grains
Range:
1 to 198000gCaCo3
1 to 9900000grains

Capacity Safety

```
CAPACITY SAFETY
FACTOR:      00%
```

Range:
00% (Default) to 50%

Water Hardness

```
FEED WATER
HARDNESS:0030mgL
```

Option:
Milligrams per liter (Default)
Grains per gallon
Range:
20 to 1999milligrams per liter
1 to 199grains per gallon

Regeneration Day Override (Timer)

```
REGENERATION DAY
OVERRIDE:07 DAYS
```

Option:
7 days (Default)
Range:
1 to 99 days

Regeneration Day Override (Meter)

```
REGENERATION DAY
OVERRIDE: OFF
```

Option:
Off (Default)
Range:
1 to 99 days

Regeneration Time

```
REGENERATION
TIME: 02:00  AM
```

Option:
02:00 (HH:MM) (Default)
Range:
01 to 12 hours

Regeneration Steps - Backwash

Option:
00:10 (Default)
Range:
01 to 04 hours - 00:00 to 04:00
Note: the steps may changes according to the regeneration flow direction set before.

Regeneration Step - Brine Draw

Option:
01:00 (Default)
Range:
00:00 to 04:00 (HH:MM)

Regeneration Step - Rapid Rinse

Option :
01:00 (Default)
Range:
00:00 to 04:00 (HH: MM)

Regeneration Step - Brine Fill

Option :
00:12 (Default)
Range:
00:00 to 04:00 (HH: MM)

Regeneration Step - Pause

Option :
Off (Default)
Range:
00:00 to 04:00 (HH:MM)

Auxiliary Relay

```
AUXILIARY RELAY:
DISABLED
```

Range :
Disabled (Default)
Enabled

Auxiliary Relay Output, Start Time

```
AUX RELAY OUTPUT
START:      00:00
```

Range:
00:00--any time during regeneration process (with exception for the last minute)
Note: displayed when the aux relay is activated. For system 6# or 7#, Aux relay display when chemical function is closed.

Auxiliary Relay Output, End Time

```
AUX RELAY OUTPUT
END:        00:01
```

Range:
The start time - any time during regeneration process

Chemical Pump Function

```
CHEMICAL PUMP:
DISABLED
```

Option :
Disabled (Default)
Enable
Note: Do not display on 6# system or 7# system lag,Chemical function only works when auxiliary relay is closed.

Chemical Pump Controlled By Meter

```
CPO AUX RELAY
VOLUME: 0001 L
```

Option :
Liters (Default)
Gallons
Range:
1 to 9999 Liters
1 to 999 Gallons
Note: Only displays on Meter systems 6# and 7#

Chemical Pump Duration

Option :
00:01 to 02:00 (HH:MM)

Flow Meter Mode

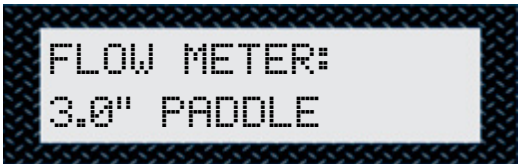

Option:
1.0, 1.5, 2.0, 2.5, 3.0 paddle (default)
Ordinary
Note: Do not display on the lag for System 6# and 7#

Maximum Flow Rate

Option :
Liters per minute (Default)
Gallons per minute
Range:
20 to 2000liter/minute
20 to 2000gallon/minute
Note: Only displays when choosing Ordinary Meter

Pluses Per Liter/Gallon

Option :
liters per minute (Default)
Gallons per minute
Range:
1 to 255 gallons
1 to 255 liters
1 to 255 plus
Note: Only displays when choosing Ordinary Meter

Programming Unit, Please Wait

Turn back to Service Position when finished

Done

Hardness Of Water

```
FEED WATER
HARDNESS:0030mgL
```

Option:
Milligrams per liter (Default)
Grains per gallon

Regeneration Day Override (Timer)

```
REGENERATION DAY
OVERRIDE:07 DAYS
```

Option:
7 days (Default)
Range:
1 to 99 days

Regeneration Day Override (Meter)

```
REGENERATION DAY
OVERRIDE: OFF
```

Option :
Off (Default)
Range:
Off, 1 to 99 days

Regeneration Time

```
REGENERATION
TIME:   02:00  AM
```

Note: time show in 12 hour clock

When finished press the Extra Cycle Button to Save and Exit

Done

Set Time Of Day

```
SET TIME OF DAY:
12:00 AM
```

Press the Page Up (Current Time) button to set the Time Of Day.

When finished press the Extra Cycle Button to Save and Exit

Done

Current flow

```
CURRENT FLOW
RATE:      0 LPM
```

Press and hold the Diagnostic Button

Peak Flow Rate

```
PEAK FLOW RATE:
           0 LPM
```

Press the Extra Cycle Button to view Peak Flow Rate

Total flow

```
TOTALIZER:
           0 L
```

Press and hold both up and down button for 5 seconds to zero out.

Regeneration Time Interval

```
LAST TWO REGENS:
         0 HOURS
```

The time interval between the last two regeneration

Last Regeneration

```
LAST REGEN:
         0 HOURS
```

Time since the last regeneration

Volume Remaining (Except System 6)

1) Move the cursor to change
2) Press up and down button to change (reduce only)

Volume Remaining (Only Show On System 6)

The volume remaining can not be edited except for system 6# lead.

Valve Address

Display for system with 2 valves or more (single systems do not show this)

Software Version

The software version of the valve

When finished press the Extra Cycle Button to Save and Exit

Done

Timed Regeneration Mode

When the days since the last regeneration reaches the preset days, the control starts to regenerate immediately at the preset regeneration time.

Meter Immediate Regeneration Mode

When volume remaining count down to zero, the control regenerates immediately.

Meter Delay Regeneration Mode

When the volume remaining count down to zero and reach the preset regeneration time, the control will regenerate immediately.

When volume remaining zeros out, the regeneration time begins to count down.

Mix Regeneration

Under Meter Immediate Regeneration Mode or Meter Delay Regeneration Mode, open the override time setting (default setting under these two modes is off), The control will record both the remaining volume and remaining time, the valve starts to regenerate at the time whenever which reaches first.

Manual Queued Regeneration

Press button during service position, the control will just record the regeneration time regardless the override days or the remaining volume. The display shows the time counting down and WAIT, blue LED flashes. The control will start to regenerate when the time zeros out, press button once again to cancel waiting regeneration.

Manual Immediate Regeneration

Press and hold the button at least for 5 seconds during service position, the control will regenerate immediately.
At any step during regeneration, press button to skip the time counting.

Restore Factory Settings

Press button and then plug in, the valve will restore to the factory default settings.

Remote Signal Control Regeneration

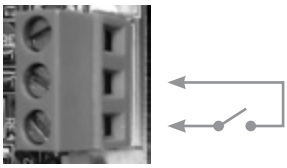

Switch on Remote Signal Control Regeneration

Activate the remote signal port and connect the remote signal control as show on the lower right picture. Switch on to initiate the remote control, the display shows the current time of remote signal and start to count down. Switch off to cancel this function. The control starts to regenerate when the time of remote signal zeros out. Under timer or meter delay mode, display just shows regeneration time of the day and count down. Blue light flashes until time zeros out, then control start to regenerate. Under meter immediate mode, control will start to regenerate right away.

Remote Signal Locked

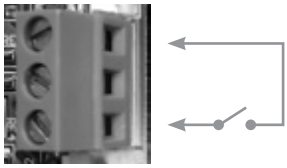

Switch on Remote Signal Locked

Note: the length of the cable to connect the remote signal should be within 150m.

Activate the remote signal port and connect the remote signal control as show on the lower right picture. Switch on to lock the control at service position. So the control won't be able to regenerate even if it reaches the preset conditions. It remains in waiting position, blue LED flashes at this time. Switch off then the control will regenerate immediately.

Memory During Power Failure

When power fails, current valve status, time at each step, current time can be stored in memory for two weeks and resume when power is on.
Note: time indicator flashes for 5 minutes when power resumes, press any key to cancel.

The System Holds A Maximum Of 4 Valves

Use CAT5 wire (network cable)
1. Use the network cable on system 5, 6, 7, 9.
2. Maximum length of the cable between the two boards is 30m.
3. Connect the signal ports one by one, the two port on the control are parallel with no particular order.

CAT5 wire interface
(Network cable)

Cable interface 1 Cable interface 2

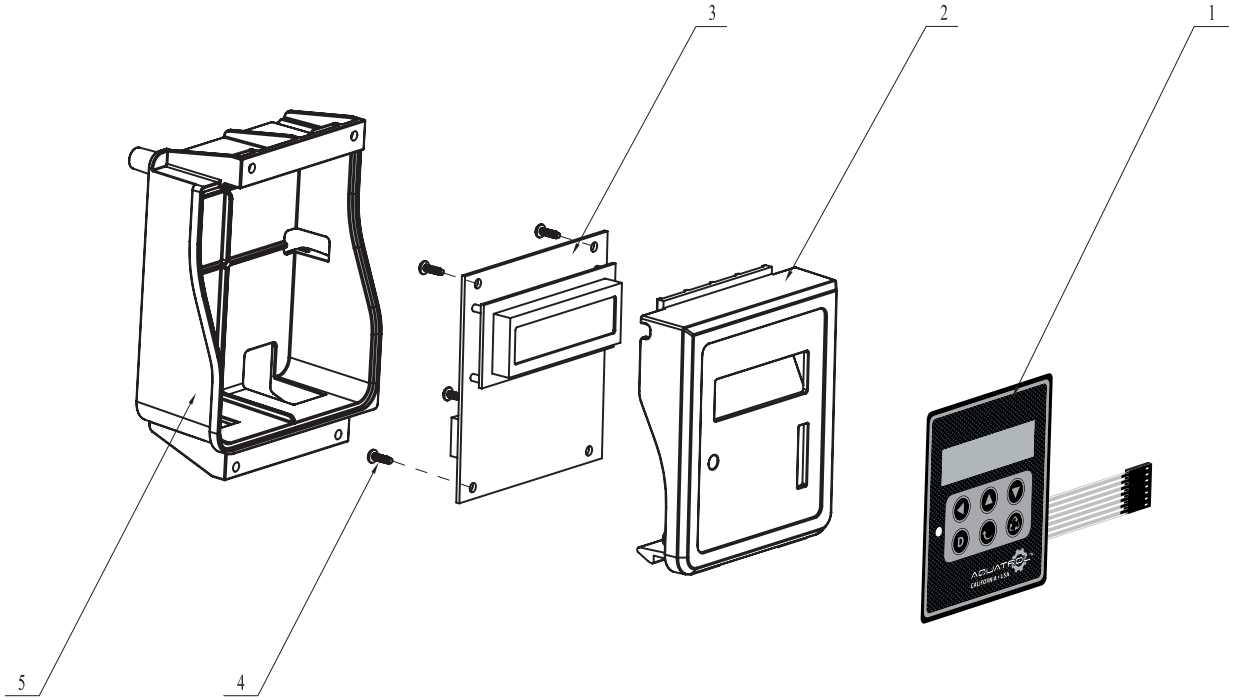

Item No.	Quantity	Part No.	Description
1-4	1	AQT-NXMODULE	NX Controller Module Assy
5*	1	A-31547	Bracket, NX Module

* Only for 315, 385 & 390 Valves

A-60711
DLFC, 2" NPT

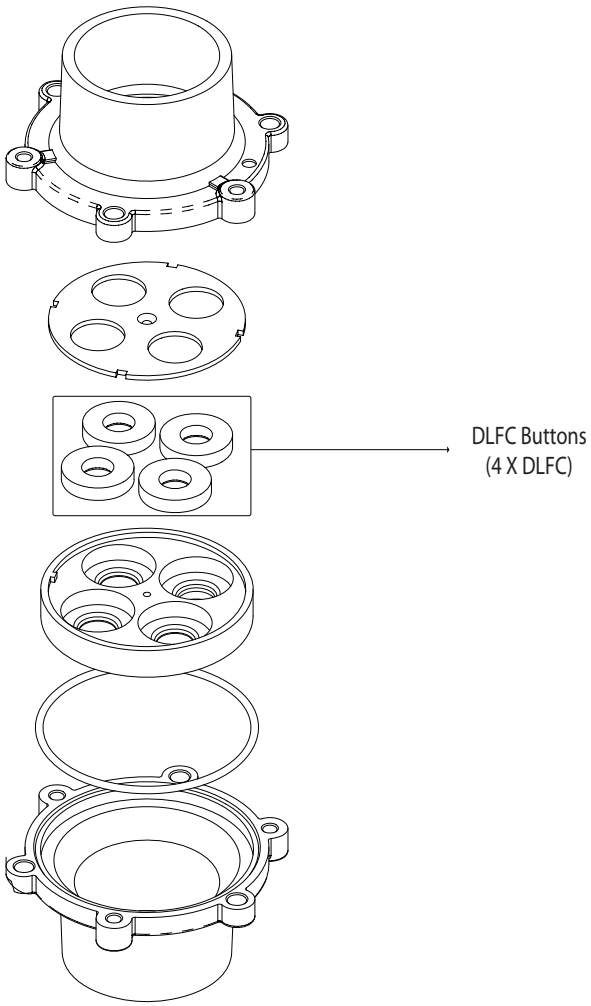

* DLFC Button/Washer Options (x4, can be mixed)	
A-17942	DLFC Washer, 5 gpm
A-17943	DLFC Washer, 8 gpm
A-17944	DLFC Washer, 9 gpm
A-16529	DLFC Washer, 10 gpm
A-16735	DLFC Washer, 12 gpm
A-16736	DLFC Washer, 15 gpm
A-16528	DLFC Washer, 20 gpm
A-16737	DLFC Washer, 25 gpm

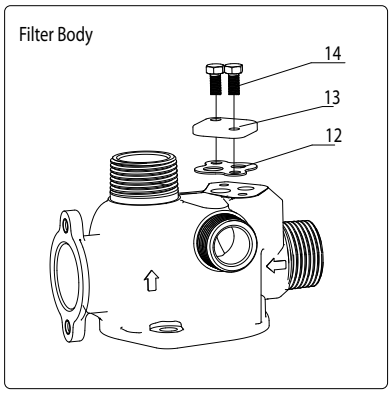
Filter Body
14
13
12

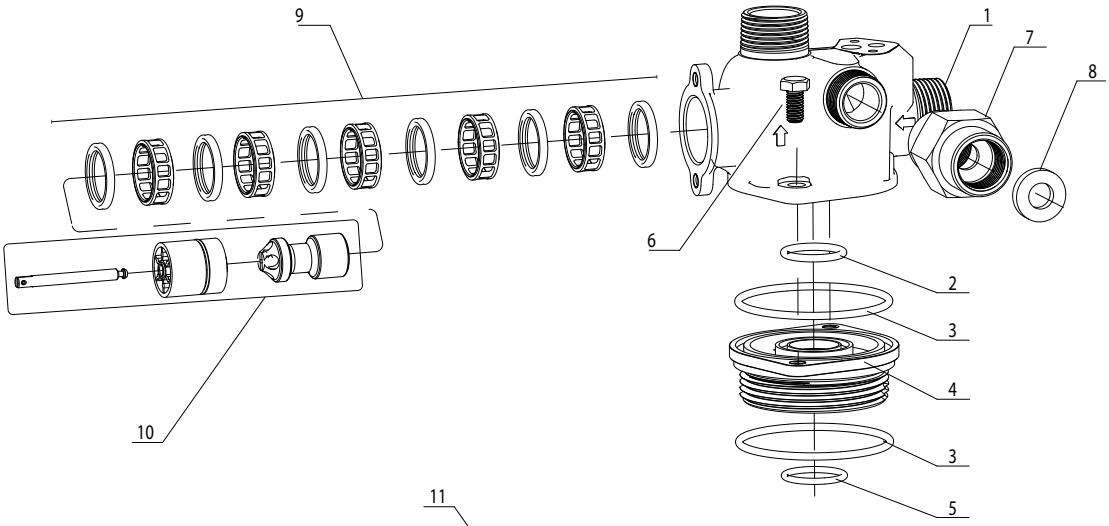
9
1
7
8
6
2
3
4
3
5
10

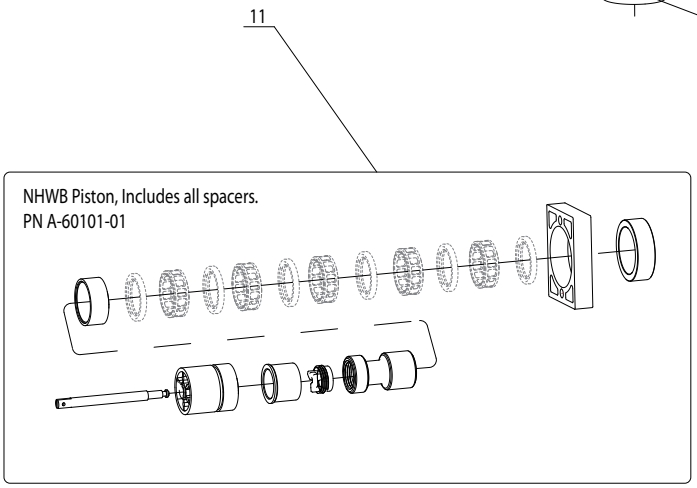
11
NHWB Piston, Includes all spacers.
PN A-60101-01

Item No.	Quantity	Part No.	Description
1	1	A-14749	Body, Valve, AQT-275
2	1	A-11710	O-ring, Body, Riser Tube
3	2	A-11208	O-ring, Body, Base
4	1	A-12461-01	Adapter Base, 2.5" - 8
5	1	A-11710-01	O-ring, Adapter Base, Riser Tube
6	2	A-11224	Screw, Hex Hd
7	1	A-60699-00	DLFC Brass, F 3/4" X F 3/4", No Washer
8*	1		DLFC Button/Washer
9	1	A-60121-10	Seals & Spacers, Kit, AQT275 & AQT-290 Upper
10	1	A-60090-HF	Piston HW, Assy, AQT-275 & AQT-290 Upper
11	1	A-60101-01	Piston NHWB, Assy, AQT-275
12	1	A-14805	Injector, Body Gasket
13	1	A-11893	Injector, Cover
14	2	A-15137	Screw, Hex, Filter Body

*** DLFC Button/Washer Options**	
A-17943	DLFC Washer Flow 8 gpm
A-17944	DLFC Washer Flow 9 gpm
A-16529	DLFC Washer Flow 10 gpm
A-16735	DLFC Washer Flow 12 gpm
A-16736	DLFC Washer Flow 15 gpm
A-16528	DLFC Washer Flow 20 pm
A-16737	DLFC Washer Flow 25 gpm

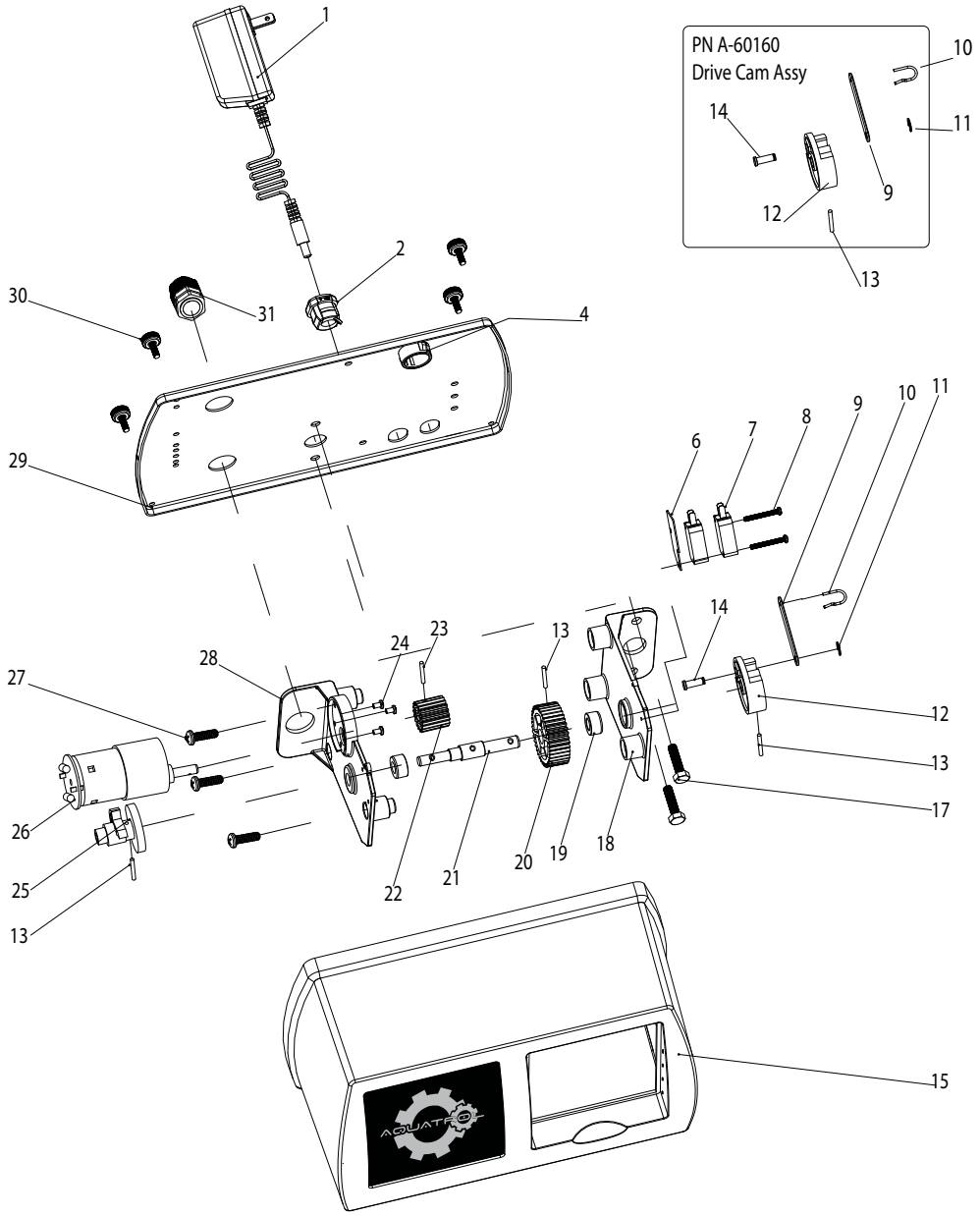
PN A-60160
Drive Cam Assy
1
2
4
6
7
8
9
10
11
12
13
14
15
17
18
19
20
21
22
23
24
25
26
27
28
29
30
31

Item No.	Quantity	Part No.	Description
1	1	A-07190F	Transformer, 24V, 60Hz, for Mechanical and NX
2	1	A-13547	Strain Relief, Cord, Back Plate
3	Not for NX Valves		
4	1	A-19691	Plug, Back Plate
5	NX Controller, see page 16 for more information		
6	1	A-10302	Insulator, Micro Switch
7	2	A-10218	Micro Switch
8	2	A-14923	Screw, Mirco Switch
9-14	1	A-60160	Drive Cam Assy, AQT-275, 285 & Upper 290
15	1	A-60219	Cover, Valve
16	Not for NX Valves		
17	2	A-10231	Screw, Hex, Bracket Motor
18	1	A-10774	Braket, Motor
19	2	A-10157	Bushing
20	1	A-16044-3G	Gear Drive, AQT-275, 285 & Upper 290
21	1	A-10158	Axis Drive, AQT-275, 285 & Upper 290
22	1	A-16043-3G	Pinion Drive, AQT-275, 285 & Upper 290
23	1	A-10338	Roll Pin
24	3	A-10016S	Screw, Motor Mounting
25	1	A-12777	Cam, Shut-off Valve
26	1	A-30018F	Motor 24V, AQT-275, 285, 290 Up, 315, 390 Up & Low
27	3	A-02002	Screw
28	1	A-11826-01	Bracket, Brine Valve Side
29	1	A-18697	Back Plate
30	4	A-02115	Back Plate, Knob Screw
31	1	A-19048	Cable Gland Connector

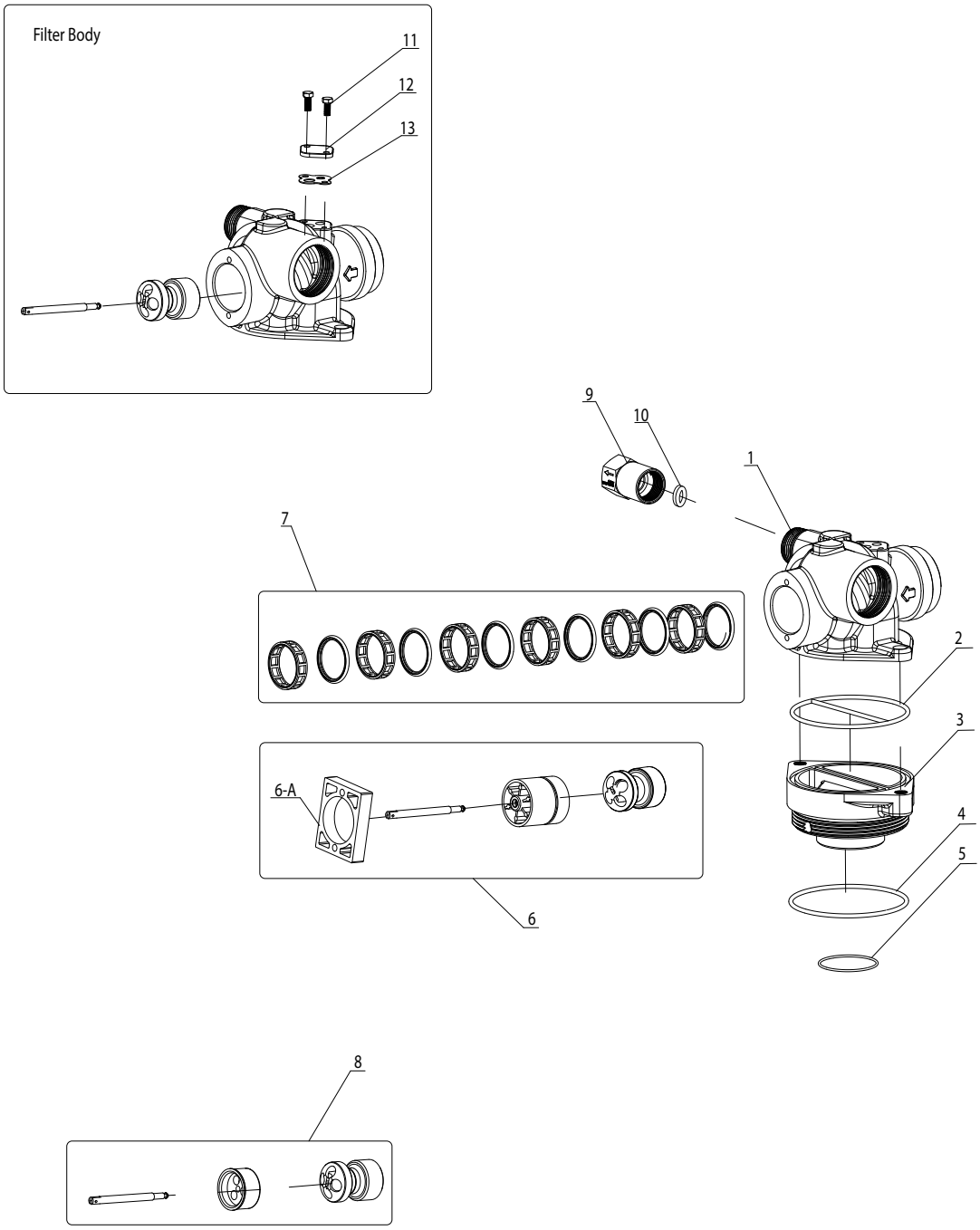
Filter Body
11
12
13
9
10
1
7
2
3
6-A
4
5
6
8

Item No.	Quantity	Part No.	Description
1	1	A-16250	Valve Body
2	1	A-28531	Seal, Adapter Base
3	1	A-28551	Adapter Base
4	1	A-16455	O-Ring, Body, Base
5	1	A-13577	O-ring, Body, Riser Tube
6	1	A-60105	Piston HW, Assy, AQT-285
6-A	1	A-19339	Spacer Piston, AQT-275NH / AQT-285
7	1	A-60129-20	Seals & Spacers, Kit, AQT-285
8	1	A-60114-01	Piston NHWB, Assy, AQT-285
9	1	A-60701-00	DLFC Brass, F 1" X F 1", No Washer
10*	1		DLFC Button/Washer
11	2	A-15137	Screw, Hex, Filter Body
12	1	A-14805	Injector, Body Gasket
13	1	A-14805	Injector, Body Gasket

*** DLFC Button/Washer Options**	
A-17943	DLFC Washer Flow 8 gpm
A-17944	DLFC Washer Flow 9 gpm
A-16529	DLFC Washer Flow 10 gpm
A-16735	DLFC Washer Flow 12 gpm
A-16736	DLFC Washer Flow 15 gpm
A-16528	DLFC Washer Flow 20 pm
A-16737	DLFC Washer Flow 25 gpm

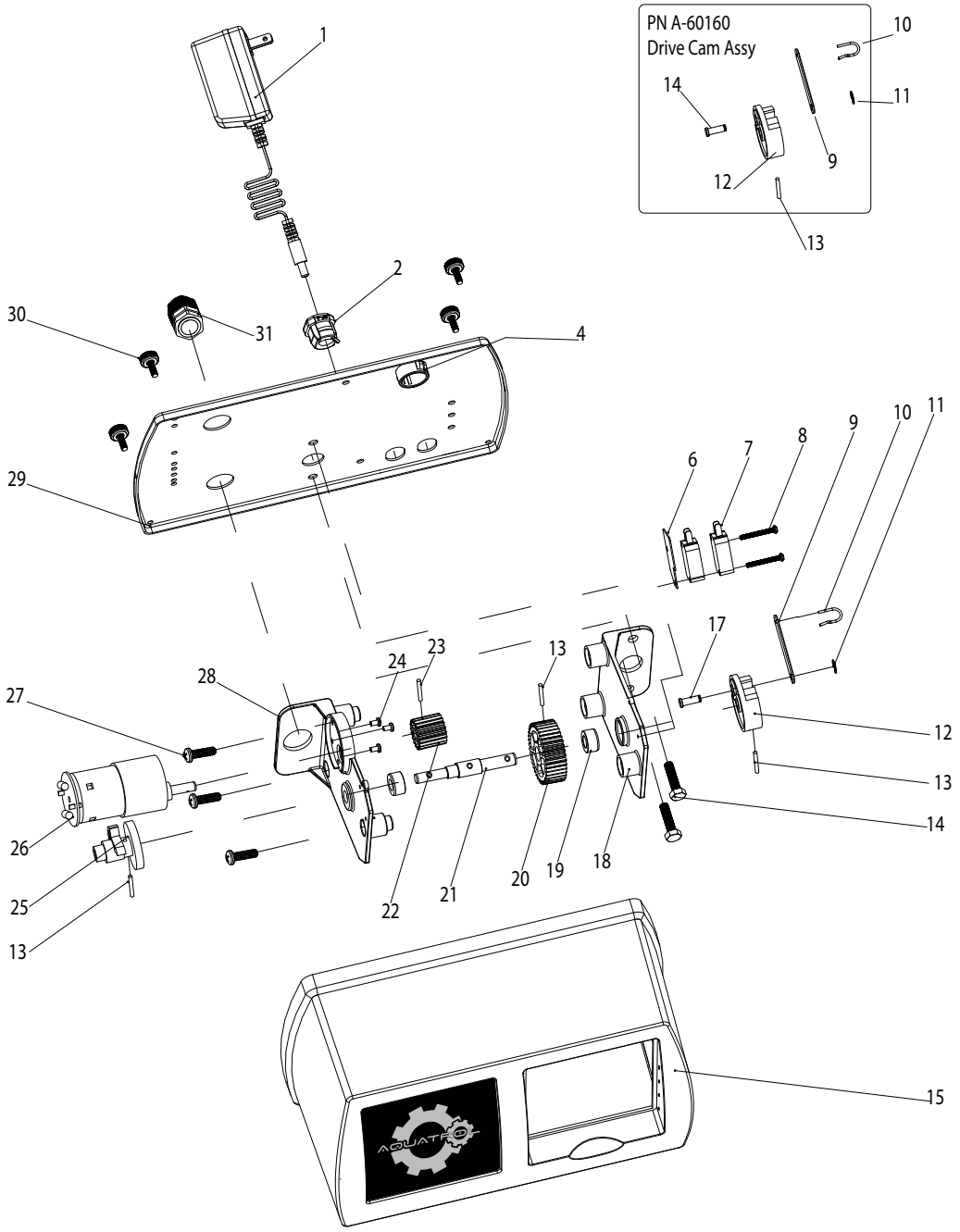
PN A-60160
Drive Cam Assy
1
2
4
6
7
8
9
10
11
12
13
14
15
17
18
19
20
21
22
23
24
25
26
27
28
29
30
31

Item No.	Quantity	Part No.	Description
1	1	A-07190F	Transformer, 24V, 60Hz, for Mechanical and NX
2	1	A-13547	Strain Relief, Cord, Back Plate
3	Not for NX Valves		
4	1	A-19691	Plug, Back Plate
5	NX Controller, see page 16 for more information		
6	1	A-10302	Insulator, Micro Switch
7	2	A-10218	Micro Switch
8	2	A-14923	Screw, Mirco Switch
9-14	1	A-60160	Drive Cam Assy, AQT-275, 285 & Upper 290
15	1	A-60219	Cover, Valve
16	Not for NX Valves		
17	2	A-10231	Screw, Hex, Bracket Motor
18	1	A-10774	Braket, Motor
19	2	A-10157	Bushing
20	1	A-16044-3G	Gear Drive, AQT-275, 285 & Upper 290
21	1	A-10158	Axis Drive, AQT-275, 285 & Upper 290
22	1	A-16043-3G	Pinion Drive, AQT-275, 285 & Upper 290
23	1	A-10338	Roll Pin
24	3	A-10016S	Screw, Motor Mounting
25	1	A-12777	Cam, Shut-off Valve
26	1	A-30018F	Motor 24V, AQT-275, 285, 290 Up, 315, 390 Up & Low
27	3	A-02002	Screw
28	1	A-11826-01	Bracket, Brine Valve Side
29	1	A-18697	Back Plate
30	4	A-02115	Back Plate, Knob Screw
31	1	A-19048	Cable Gland Connector

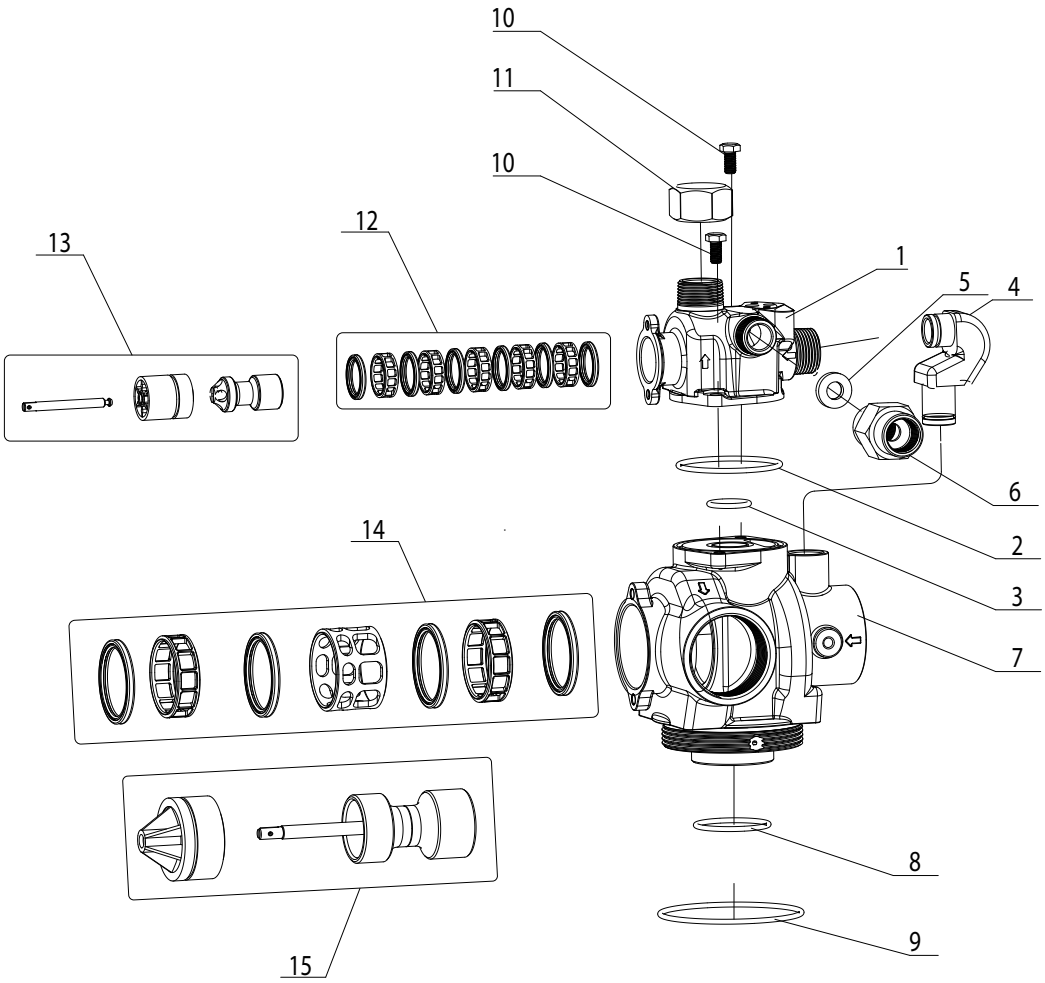

No Hard Water Bypass Piston

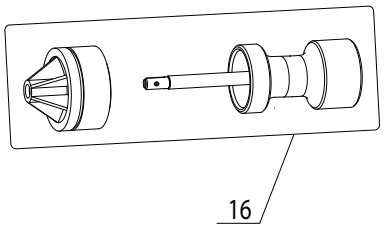

Item No.	Quantity	Part No.	Description
1	1	A-14749-01	Body, Valve Upper, AQT 290
2	1	A-11208	O-ring, Body Seal, Base
3	2	A-11710	O-ring, Body Seal, Riser Tube
4	1	A-14751	Coupling, AQT-290 Upper-Lower
5*	1		DLFC Button/Washer
6	1	A-60699-00	DLFC Brass, F 3/4" X F 3/4", No Washer
7	1	A-14750-01	Body, Valve Lower, 2", AQT-290
8	1	A-13577	O-ring, Body, Riser Tube
9	1	A-13575	O-ring, Body, Base
10	2	A-11224	Screw, Valve Mounting
11	1	A-12248	Cap, 1" NPT
12	1	A-60090-HF	Piston HW, Assy, AQT-275 & AQT-290 Upper
13	1	A-60121-10	Seals & Spacers, Kit, AQT275 & AQT-290 Upper
14	1	A-60128	Seals & Spacers, Kit, AQT-290 Lower
15	1	A-60103	Piston HW, Assy, AQT-290 Lower
16	1	A-60104	Piston NH, Assy, AQT-290 Lower

*** DLFC Button/Washer Options**	
A-17943	DLFC Washer Flow 8 gpm
A-17944	DLFC Washer Flow 9 gpm
A-16529	DLFC Washer Flow 10 gpm
A-16735	DLFC Washer Flow 12 gpm
A-16736	DLFC Washer Flow 15 gpm
A-16528	DLFC Washer Flow 20 pm
A-16737	DLFC Washer Flow 25 gpm

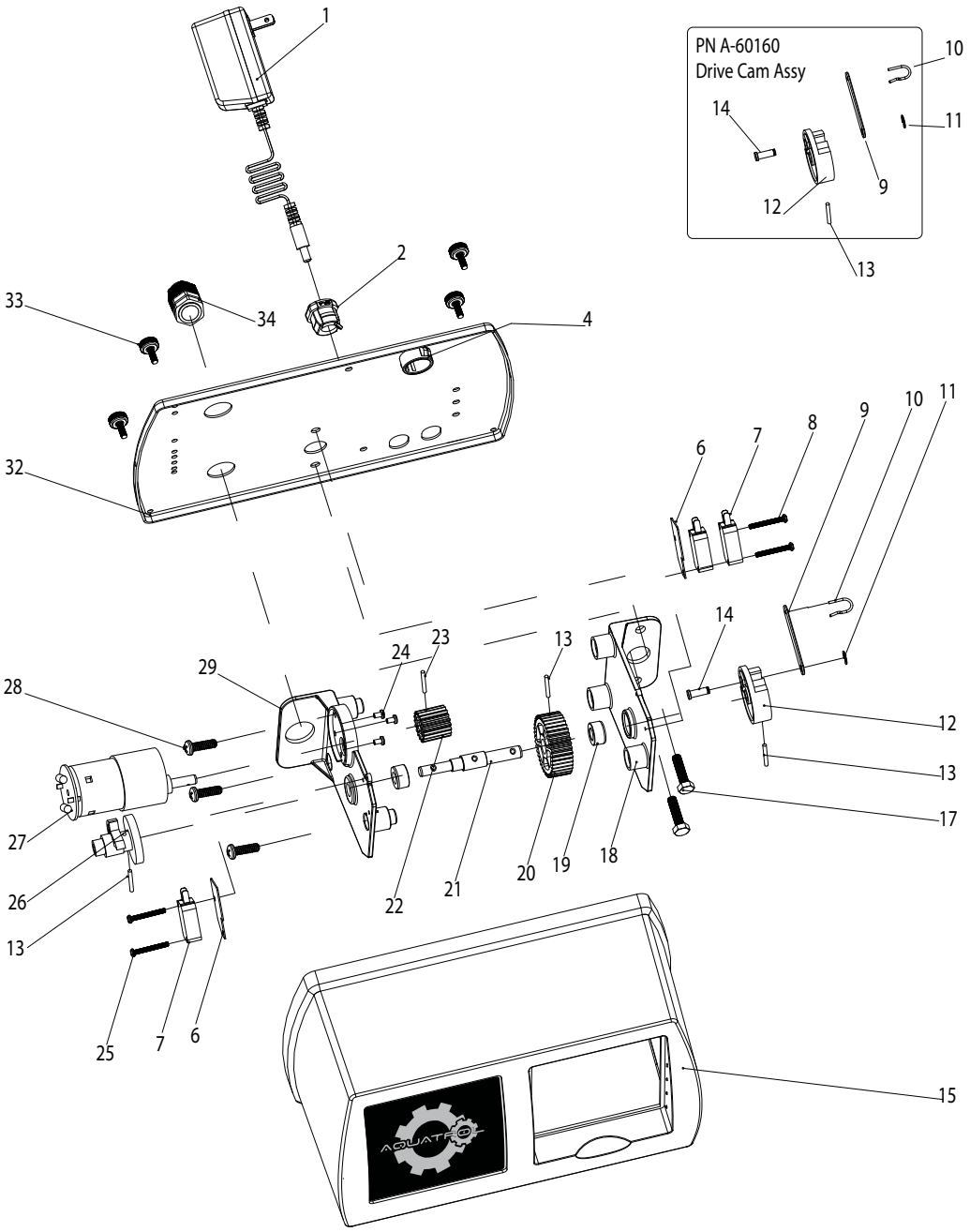
PN A-60160
Drive Cam Assy
1
2
4
6
7
8
9
10
11
12
13
14
15
17
18
19
20
21
22
23
24
25
26
27
28
29
32
33
34

Item No.	Quantity	Part No.	Description
1	1	A-07190F	Transformer, 24V, 60Hz, for Mechanical and NX
2	1	A-13547	Strain Relief, Cord, Back Plate
3	Not for NX Valves		
4	1	A-19691	Plug, Back Plate
5	NX Controller, see page 16 for more information		
6	2	A-10302	Insulator, Micro Switch
7	3	A-10218	Micro Switch
8	2	A-14923	Screw, Mirco Switch
9-14	1	A-60160	Drive Cam Assy, AQT-275, 285 & Upper 290
15	1	A-60219	Cover, Valve
16	Not for NX Valves		
17	2	A-10231	Screw, Hex, Bracket Motor
18	1	A-10774	Braket, Motor
19	2	A-10157	Bushing
20	1	A-16044-3G	Gear Drive, AQT-275, 285 & Upper 290
21	1	A-10158	Axis Drive, AQT-275, 285 & Upper 290
22	1	A-16043-3G	Pinion Drive, AQT-275, 285 & Upper 290
23	1	A-10338	Roll Pin
24	3	A-10016S	Screw, Motor Mounting
25	1	A-14923-01	Screw, Mirco Switch Single
26	1	A-12777	Cam, Shut-off Valve
27	1	A-30018F	Motor 24V, AQT-275, 285, 290 Up, 315, 390 Up & Low
28	3	A-02002	Screw
29	1	A-11826-01	Bracket, Brine Valve Side
30	Not for NX Valves		
31	Not for NX Valves		
32	1	A-18697	Back Plate
33	4	A-02115	Back Plate, Knob Screw
34	1	A-19048	Cable Gland Connector

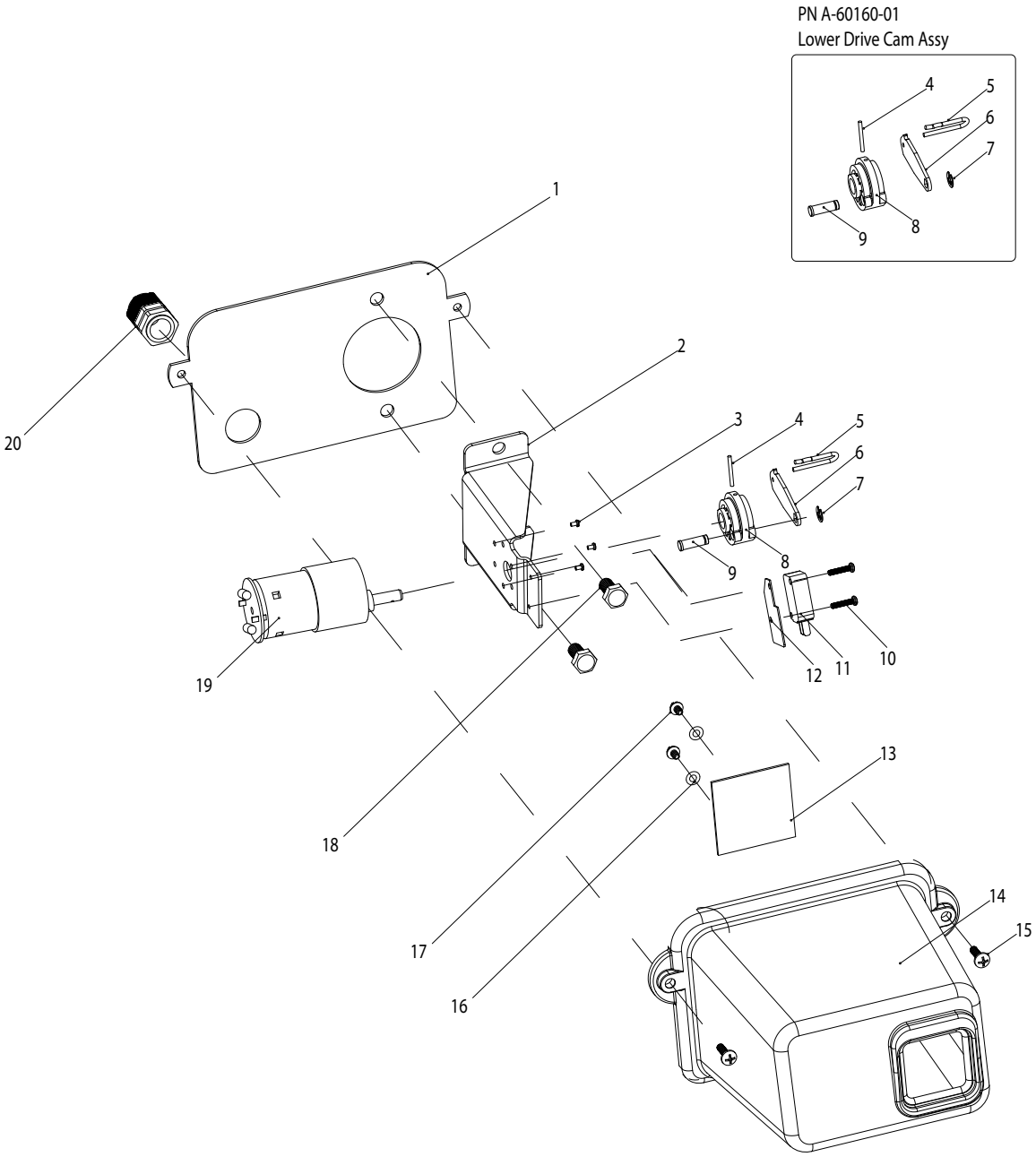
PN A-60160-01
Lower Drive Cam Assy
4
5
6
7
8
9
1
2
3
4
5
6
7
8
9
10
11
12
13
14
15
16
17
18
19
20

Item No.	Quantity	Part No.	Description
1	1	A-07190F	Back Plate, AQT-290 Lower
2	1	A-14769	Braket, Motor
3	3	A-10016S	Screw, Motor Mounting
4-9	1	A-60160-01	Lower Drive Cam Assy
10	1	A-11805	Screw, Micro Switch
11	1	A-10218	Micro Switch
12	1	A-10302	Insulator, Micro Switch
13	1	A-18724	Window
14	1	A-18708-2	Cover, AQT-290 Lower
15	1	A-18744	Screw, Cover
16	2	A-14430-01	Washer, Window
17	2	A-14430	Screw, Window
18	2	A-11224	Screw, Motor Bracket, AQT-290 Lower
19	1	A-30017F	Motor 24V, AQT-290 Lower
20	1	A-19048	Cable Gland Connector

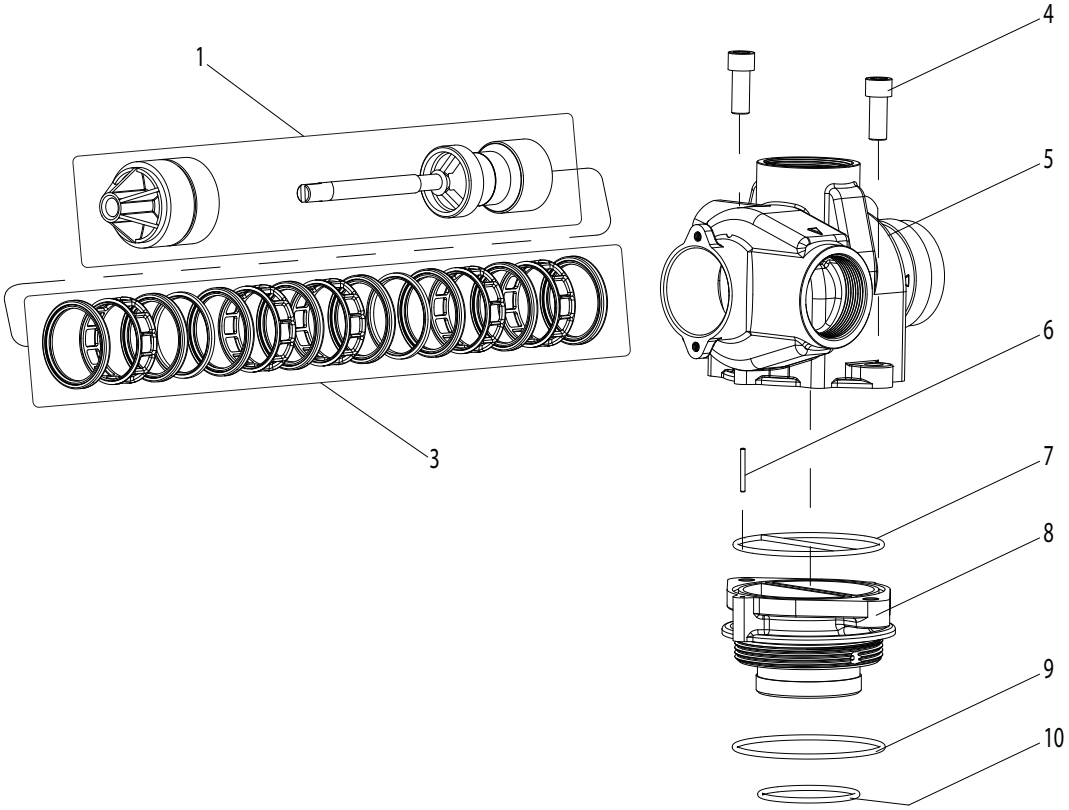

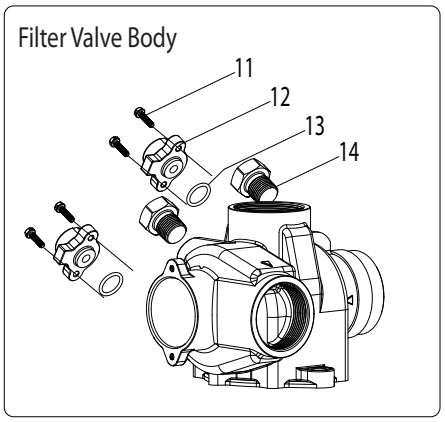

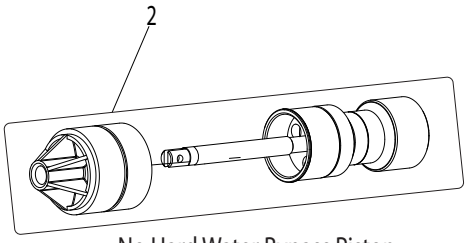

No Hard Water Bypass Piston

Item No.	Quantity	Part No.	Description
1	1	A-60106-00	Piston HW, AQT-315, AQT-390 Upper
2	1	A-60113-01	Piston NHW, AQT-315, AQT-390 Upper
3	1	A-60131	Seals & Spacers, AQT-315, AQT-390 Upper
4	2	A-02057F	Screw, Body
5	1	A-15114	Body, Valve, AQT-315
6	1	A-00108F	Straight Pin
7	1	A-15112	Seal, Valve Body-Adapter
8	1	A-15117-01	Adapter
9	1	A-13575	O-ring
10	1	A-15247	O-ring
11	4	A-12473	Screw, Plug, Injector
12	2	A-16341-02	Plug, Injector, 180
13	2	A-15246	O-ring, Plug, Injector
14	2	A-31509F	Screw, Male Plug

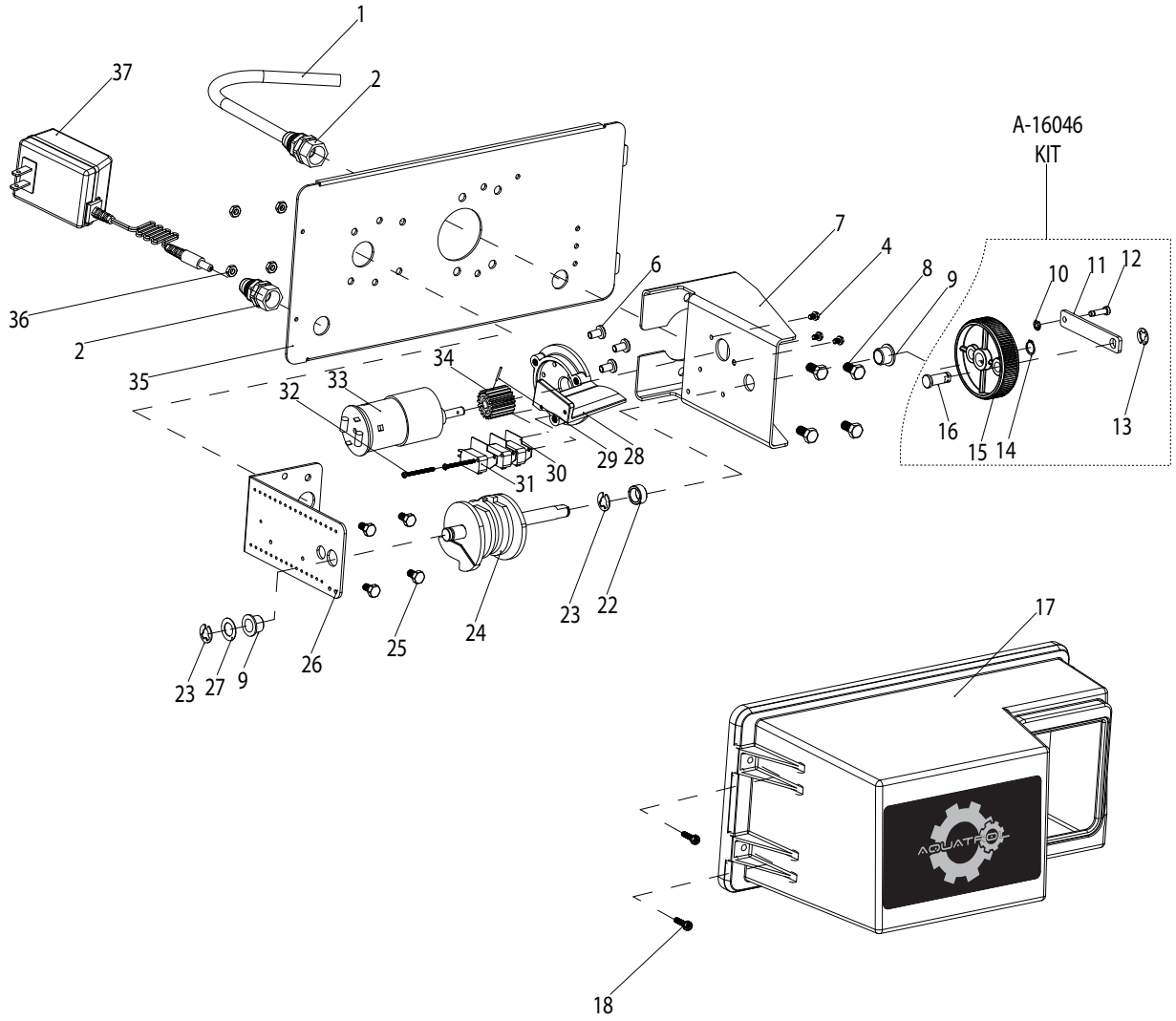
1
2
37
36
2
35
32
33
34
6
7
4
8
9
A-16046
KIT
10
11
12
13
14
15
16
29
28
30
31
23
22
24
25
26
23
27
9
17
18

Item No.	Quantity	Part No.	Description
1	1	A-17470	Cable Guide, Meter
2	1	A-17470-00	Screw Cap
3	Not for NX Valves		
4	3	A-11225	Screw, Timer
5	NX Controller, see page 16 for more information		
6	3	A-10016S	Screw, Motor Mounting
7	1	A-15120-01	Motor, Bracket
8	4	A-11224	Hex Bolt, Motor Bracket
9	2	A-16052	Bushing
10	1	A-11898	Retainer
11	1	A-16047	Connecting Link
12	1	A-11709	Pin-drive Link
13	1	A-11774	Retaining Ring
14	1	A-16050	Retaining Ring
15	1	A-16046	Drive Gear, Kit (includes #10 - #16), 315/390
16	1	A-16048	Drive Bearing
17 - 18	1	A-60240	Valve Cover
19	Not for NX Valves		
20	Not for NX Valves		
21	Not for NX Valves		
22	1	A-16052-1	Bushing, Cam
23	2	A-16051	Retaining Ring
24	1	A-16494-03	Cam
25	4	A-10231	Hex Bolt, Bracket, Brine Valve
26	1	A-16053	Bracket, Brine Valve
27	1	A-16059	Washer, SS
28	1	A-17797	Bracket, Switch Mounting 315/390
29	1	A-11381	Roll Pin
30	3	A-10302	Insulator, Switch
31	3	A-10218	Switch
32	2	A-40080	Screw, Switch
33	1	A-30018F	Motor 24V, AQT-275, 285, 290 Up, 315, 390 Up & Low
34	1	A-16045-3G	Drive Pinion, Motor 3rd Gen.
35	1	A-19304	Back Plate
36	4	A-11235	Nut
37	1	A-07190F	Transformer, 24V, 60Hz, for Mechanical and NX

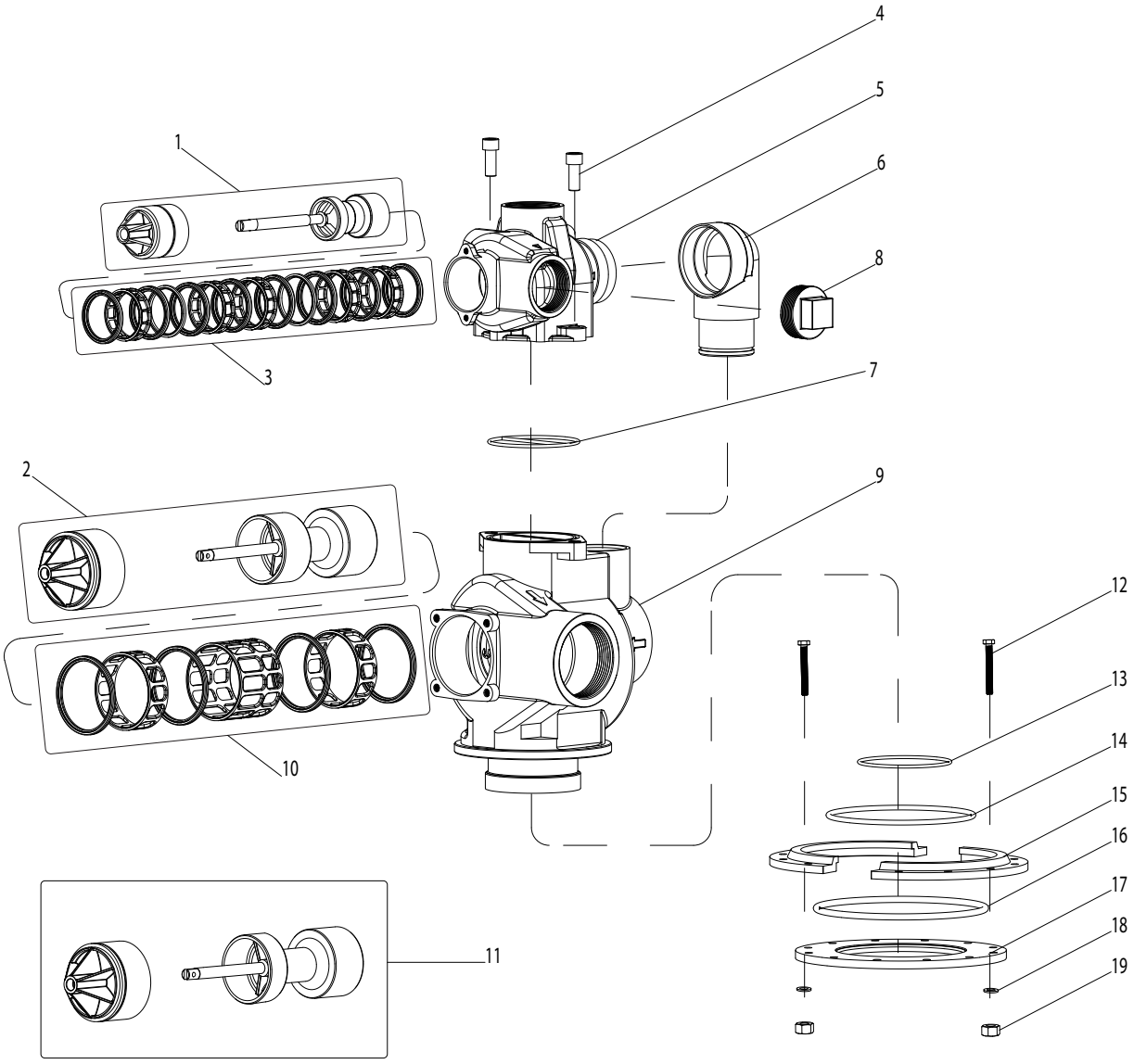
1
2
3
4
5
6
7
8
9
10
11
12
13
14
15
16
17
18
19

Item No.	Quantity	Part No.	Description
1	1	A-60106-00	Piston HW, AQT-315, AQT-390 Upper
2	1	A-60107-00	Piston HW, AQT-390 Lower
3	1	A-60131	Seals & Spacers, AQT-315, AQT-390 Upper
4	2	A-40118	Screw, Body
5	1	A-15114	Body, Valve, AQT-390 Upper
6	1	A-16074	Coupling Assembly
7	1	A-15112	Seal, Valve Body-Adapter
8	1	A-16088	Plug, 2" NPT
9	1	A-16067-02	Valve Body, Lower, 3"
10	1	A-60132	Seals & Spacers, AQT-390 Lower
11	1	A-60107-10	Piston NHW, AQT-390 Lower
12	12	A-16517	Hex Bolt, Flange
13	1	A-16800	O-Ring
14	1	A-16345	O-Ring
15	1	A-16482	Flange Segment, (2 pcs)
16	1	A-16484	O-Ring
17	1	A-16483	Flange Ring
18	12	A-18619	Washer
19	12	A-16346	Nut

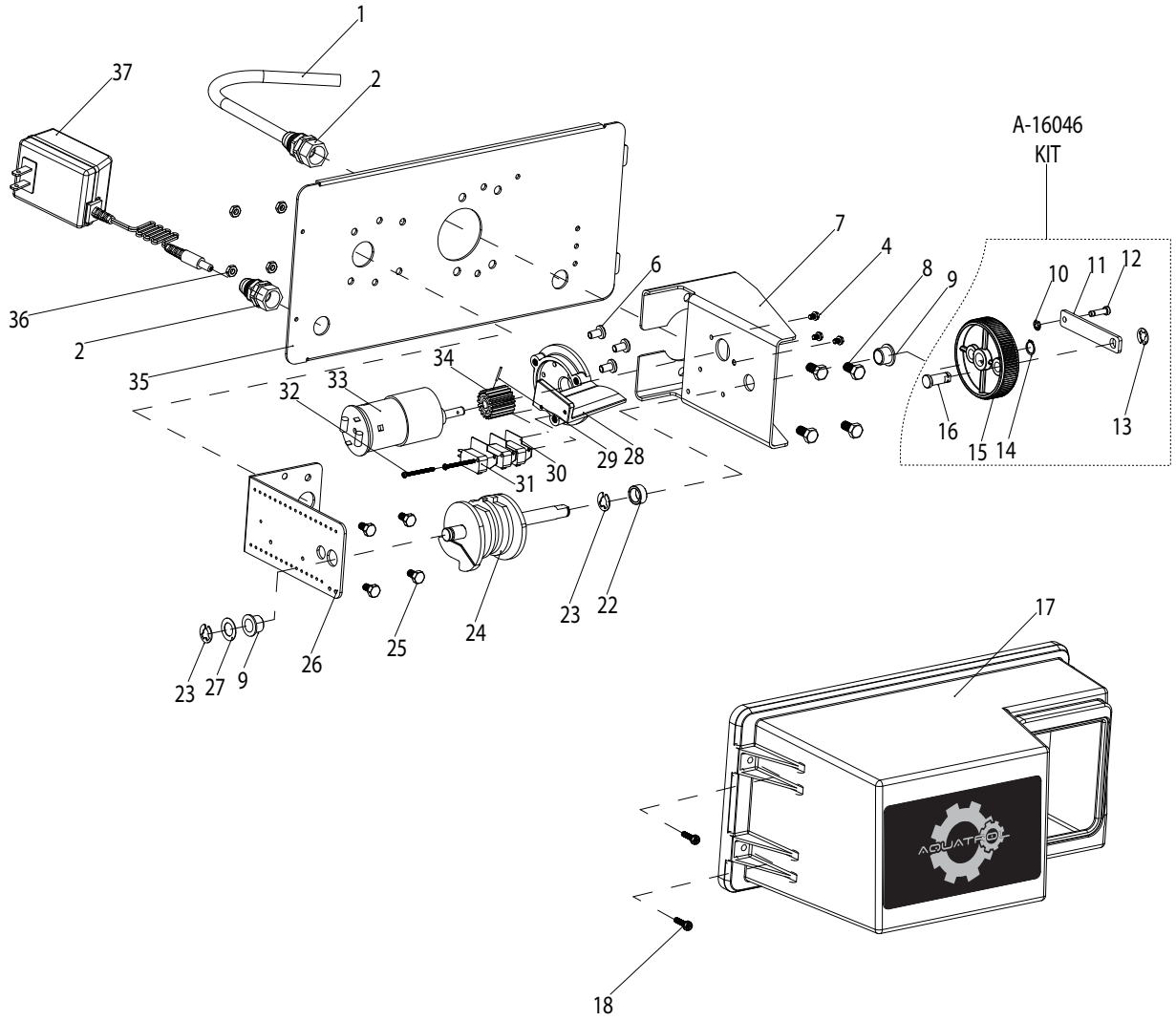
1
2
37
36
2
35
32
33
34
6
7
4
8
9
A-16046
KIT
10
11
12
13
14
15
16
29
28
30
31
23
22
24
25
26
23
27
9
17
18

Item No.	Quantity	Part No.	Description
1	1	A-17470	Cable Guide, Meter
2	1	A-17470-00	Screw Cap
3	Not for NX Valves		
4	3	A-11225	Screw
5	NX Controller, see page 16 for more information		
6	3	A-10016S	Screw, Motor Mounting
7	1	A-15120-01	Motor, Bracket
8	4	A-11224	Hex Bolt, Motor Bracket
9	2	A-16052	Bushing
10	1	A-11898	Retainer
11	1	A-16047	Connecting Link
12	1	A-11709	Pin-drive Link
13	1	A-11774	Retaining Ring
14	1	A-16050	Retaining Ring
15	1	A-16046	Drive Gear, Kit (includes #10 - #16), 315/390
16	1	A-16048	Drive Bearing
17 - 18	1	A-60240	Valve Cover
19	Not for NX Valves		
20	Not for NX Valves		
21	Not for NX Valves		
22	1	A-16052-1	Bushing, Cam
23	2	A-16051	Retaining Ring
24	1	A-16494-03	Cam
25	4	A-10231	Hex Bolt, Bracket, Brine Valve
26	1	A-16053	Bracket, Brine Valve
27	1	A-16059	Washer, SS
28	1	A-17797	Bracket, Switch Mounting 315/390
29	1	A-11381	Roll Pin
30	3	A-10302	Insulator, Switch
31	3	A-10218	Switch
32	2	A-40080	Screw, Switch
33	1	A-30018F	Motor 24V, AQT-275, 285, 290 Up, 315, 390 Up & Low
34	1	A-16045-3G	Drive Pinion, Motor 3rd Gen.
35	1	A-19304	Back Plate
36	4	A-11235	Nut
37	1	A-07190F	Transformer, 24V, 60Hz, for Mechanical and NX

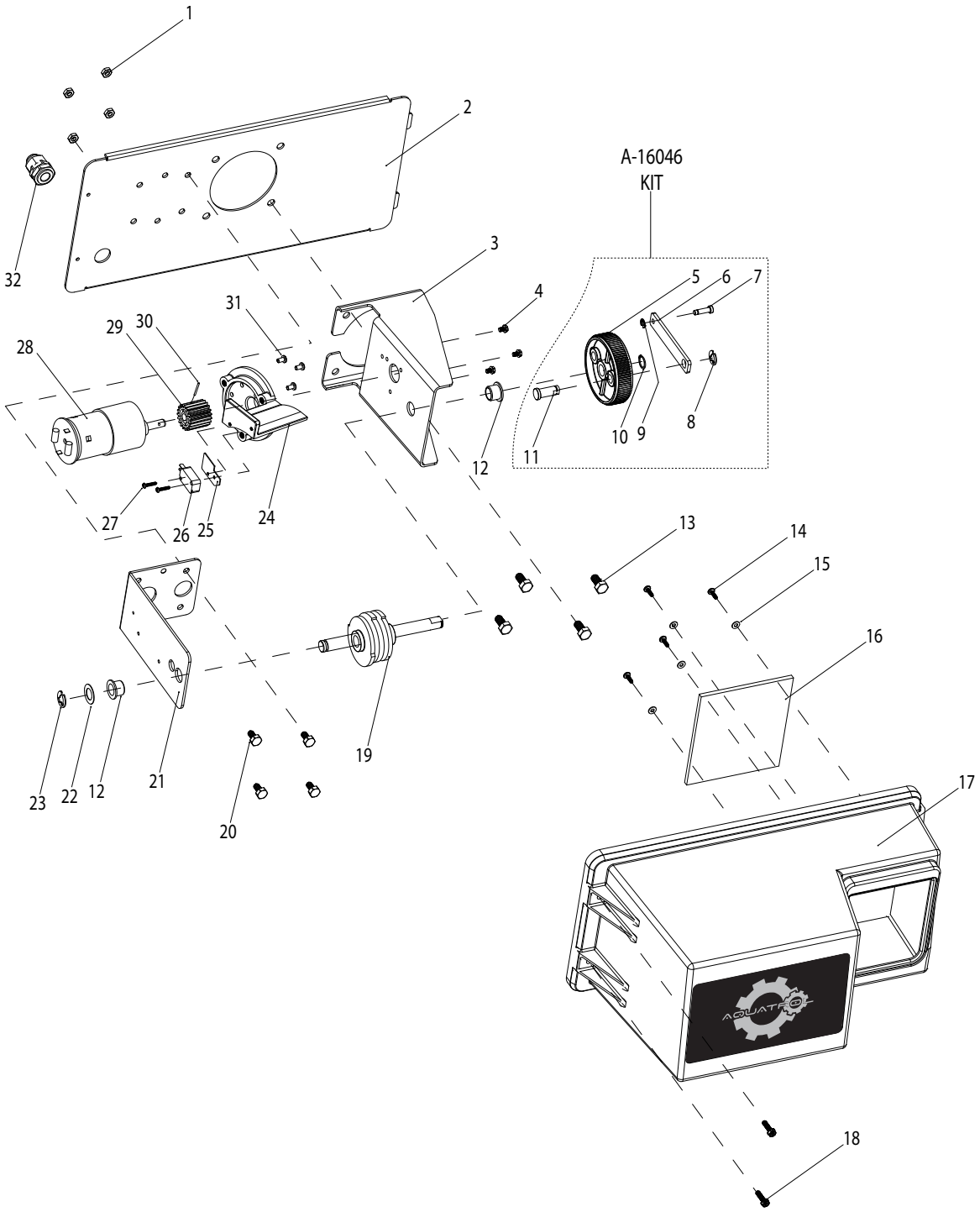
1
2
A-16046
KIT
3
4
5
6
7
8
9
10
11
12
13
14
15
16
17
18
19
20
21
22
23
24
25
26
27
28
29
30
31
32

Item No.	Quantity	Part No.	Description
1	4	A-11235	Nut
2	1	A-19305	Back Plate, 390 Lower
3	1	A-16086	Motor, Bracket, 390 Lower
4	3	A-11225	Screw
5	1	A-11898	Retainer
6	1	A-16047	Connecting Link
7	1	A-11709	Pin-drive Link
8	1	A-11774	Retaining Ring
9	1	A-16050	Retaining Ring
10	1	A-16046	Drive Gear, Kit (includes #10 - #16), 315/390
11	1	A-16048	Drive Bearing
12	2	A-16052	Bushing
13	4	A-11224	Hex Bolt, Motor Bracket
17 - 18	1	A-60240	Valve Cover
19	Not for NX Valves		
20	Not for NX Valves		
21	Not for NX Valves		
19	1	A-16494-03	Cam
20	4	A-10231	Hex Bolt, Bracket, Brine Valve
21	1	A-16053	Bracket, Brine Valve
22	1	A-16059	Washer, SS
23	1	A-16051	Retaining Ring
24	1	A-17797	Bracket, Switch Mounting 315/390
25	1	A-10302	Insulator, Switch
26	1	A-10218	Switch
27	2	A-11805	Screw, Switch
28	1	A-30018F	Motor 24V, AQT-275, 285, 290 Up, 315, 390 Up & Low
29	1	A-16045-3G	Drive Pinion, Motor 3rd Gen.
30	1	A-11381	Roll Pin
31	3	A-10016S	Screw, Motor Mounting
32	1	A-18691	Connector, Back Plate, Lower 390

PN 1 - 23 -------- A-60029 --- Brine Valve, Short Stem, Less BLFC, 3/8" for AQT-275
PN 15 - 23 ------ A-60480 --- Injector Body, 3/8" for AQT-275

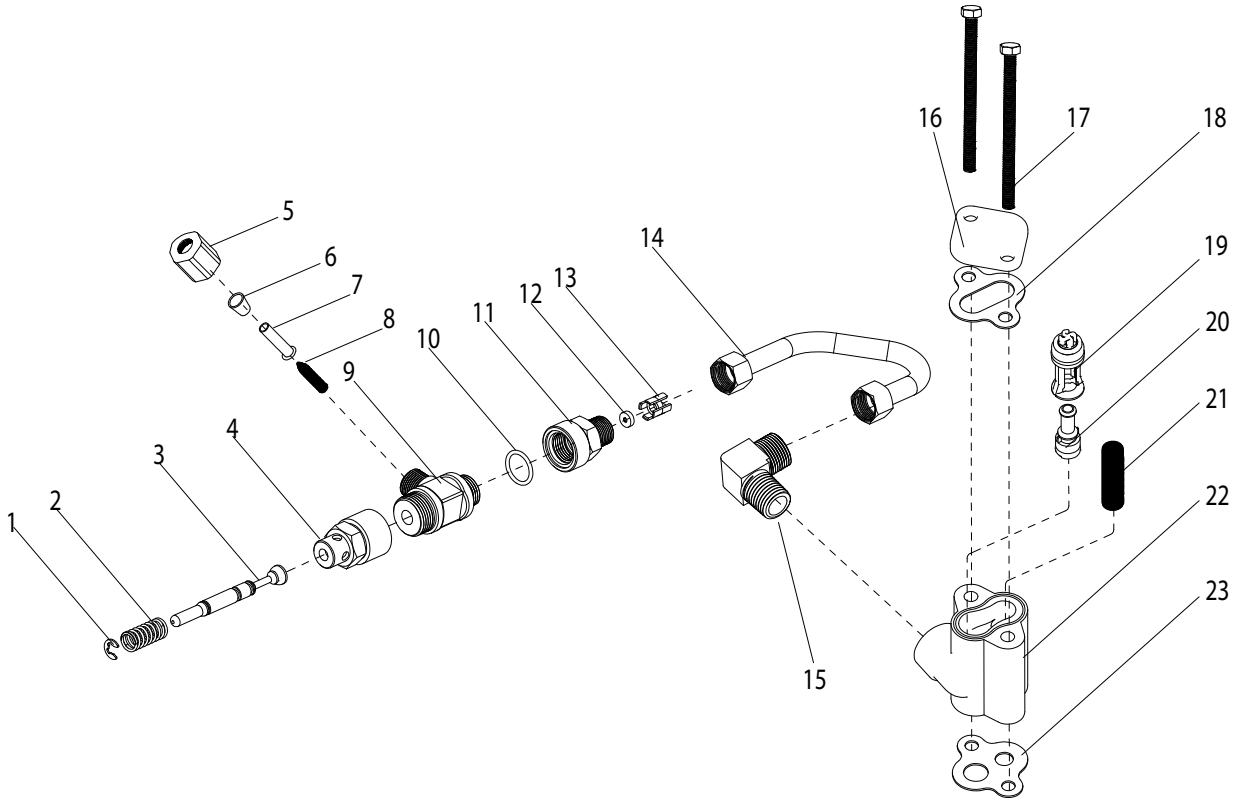

Item No.	Quantity	Part No.	Description
1	1	A-10250	Retaining Ring
2	1	A-10249	Spring, Brine Valve
3	1	A-12552-02	Stem, Brine Valve
4	1	A-11749	Stem Guide, Brine Valve
5	1	A-10329	Fitting Nut, 3/8", Brass
6	1	A-10330	Fitting Sleeve
7	1	A-10332	Fitting Insert
8	1	A-56060	Screen, Brine
9	1	A-12748	Body, Brine Valve
10	1	A-11982	O-Ring
11	1	A-60020	End Plug, Brine Valve
12**	1	A-120XX	BLFC, Button
13	1	A-13245	BLFC, Retainer
14	1	A-16508	Tube, Brine Valve
15	1	A-10328	Fitting, Elbow
16	1	A-11893	Injector Cover
17	2	A-14804	Screw, Injector Cover
18	1	A-10229	Injector Cover Gasket
19***-20***	1	A-18272-X	Injector Assy
21	1	A-10227	Screen, Injector
22	1	A-17776	Injector, Body
23	1	A-14805	Injector, Body Gasket

** BLFC Button Options	
A-12094	BLFC Button - 0.25 gpm
A-12095	BLFC Button - 0.5 gpm
A-12097	BLFC Button - 1.0 gpm

*** Injectors	
A-18272-0	Injector Assy #0, Red (12" and 13" Tank)
A-18272-1	Injector Assy #1, White (14" and 16" Tank)
A-18272-2	Injector Assy #2, Blue (18" Tank)
A-18272-3	Injector Assy #3, Yellow (20" Tank)

PN 1 - 22-------- A-60034 --- Brine Valve, Short Stem, Less BLFC, 1/2" for AQT-285
PN 14 - 22 ------ A-60381 --- Injector Body, 1/2" for AQT-285

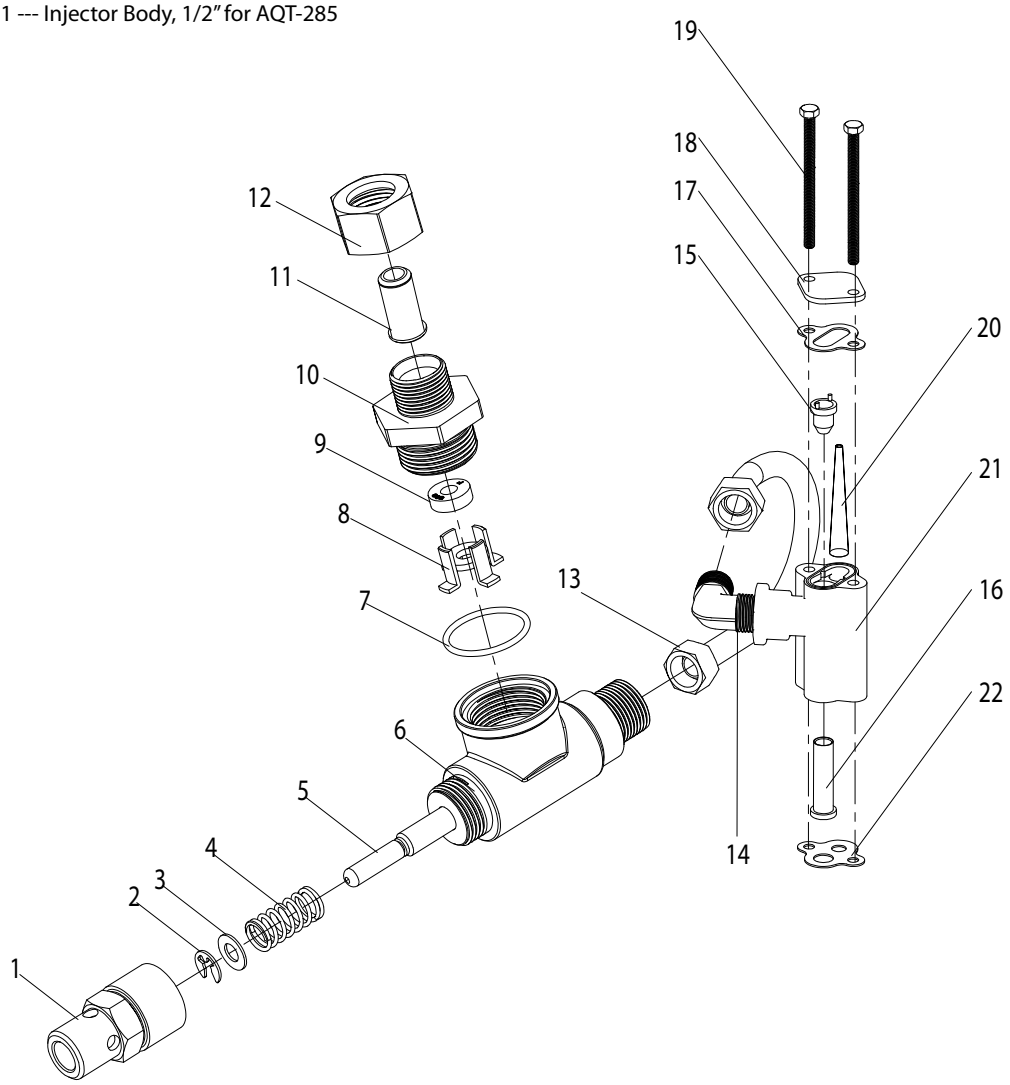

Item No.	Quantity	Part No.	Description
1	1	A-15517	Stem Guide, Brine Valve
2	1	A-10250	Retaining Ring
3	1	A-04003F	Washer
4	1	A-15310	Spring, Brine Valve
5	1	A-14797	Stem, Brine Valve
6	1	A-14790	Body, Brine Valve
7	1	A-13201	O-ring
8	1	A-14785	BLFC, Retainer
9**	1	A-120XX	BLFC, Button
10	1	A-15413-01	Fitting Brine Line
11	1	A-15415	Fitting Insert
12	1	A-15414	Fitting Nut, Brass
13	1	A-15413	Fitting, Elbow
14	1	A-16460	Tube, Brine Valve
15***- 16***	1	A-14801-XXC	Injector Assy
17	2	A-10229	Injector Cover Gasket
18	1	A-11893	Injector Cover
19	1	A-14804	Screw, Injector Cover
20	1	A-10227-170	Screen, Injector
21	1	A-17777	Injector, Body
22	1	A-14805	Injector, Body Gasket

** BLFC Button Options	
A-12085	BLFC Button - 1.2 gpm
A-12086	BLFC Button - 1.5 gpm
A-12087	BLFC Button - 2.0 gpm
A-12088	BLFC Button - 2.4 gpm
A-12089	BLFC Button - 3.0 gpm
A-12090	BLFC Button - 3.5 gpm
A-12091	BLFC Button - 4.0 gpm
A-12092	BLFC Button - 5.0 gpm

*** Injectors	
A-14801-03C	Injector Assy, #3C, Yellow (18" & 20" Tank)
A-14801-04C	Injector Assy, #4C, Green (21" Tank)
A-14801-05C	Injector Assy, #5C, White (24" Tank)
A-14801-06C	Injector Assy, #6C, Red (30" and 36" Tank)

PN 1 - 14 -------- A-60277 --- Brine Valve, Short Stem, Less BLFC, 1" for AQT-315 & AQT-390
PN 10 - 14 ------ A-60036 --- Injector Body, 1"for AQT-315 & AQT-390

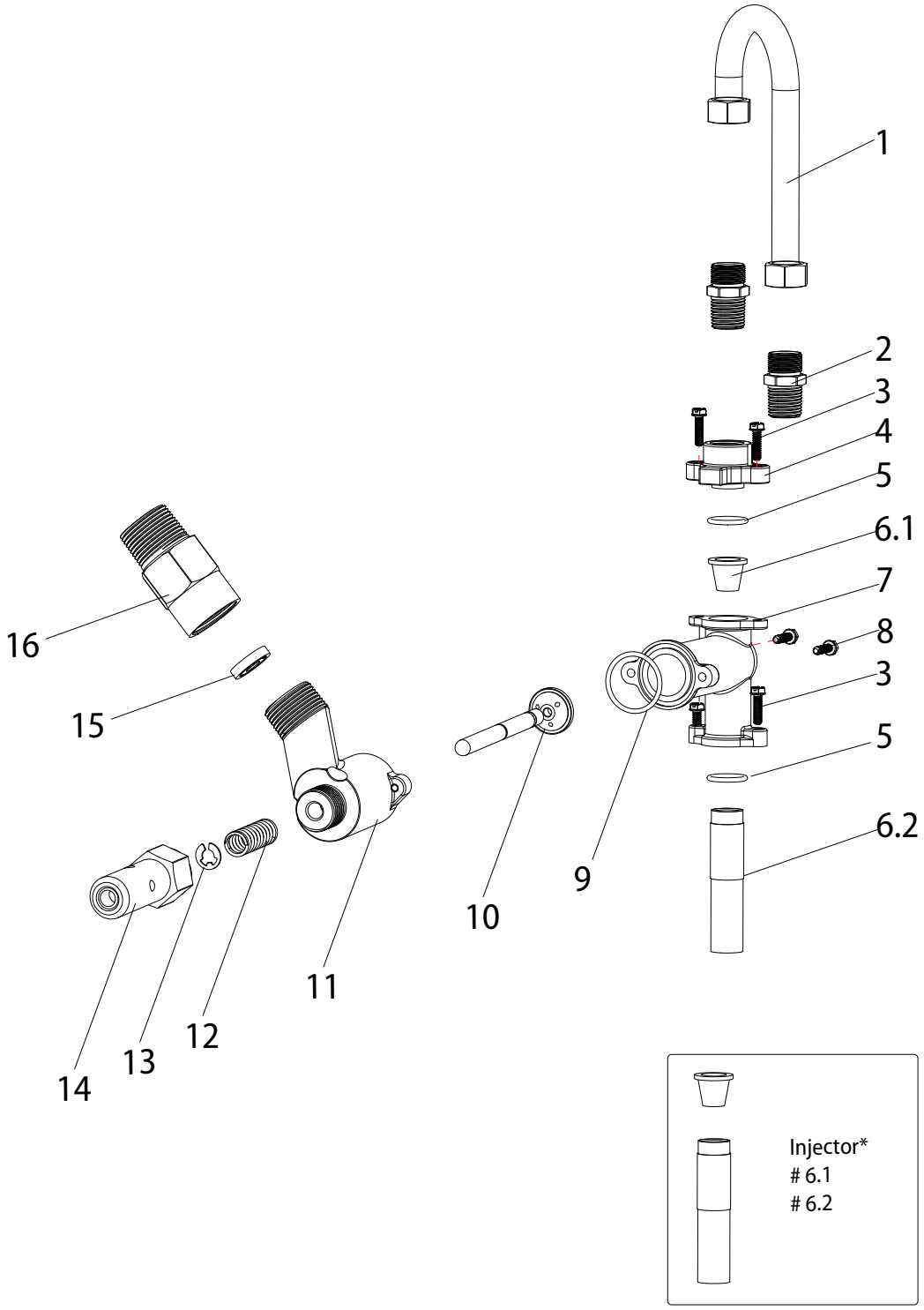

Item No.	Quantity	Part No.	Description
1	1	A-18703	Brine Tube
2	2	A-18702	Tube Fitting
3	6	A-12473	Screw
4	1	A-16341-01	Cap, Injector, BV-180
5	2	A-15246	O-Ring, Cap, Injector, BV-180
6.1*	1		Injector Nozzle
6.2*	1		Injector Throat
7	1	A-16340	Injector Body
8	2	A-12473	Screw
9	1	A-19054	O-Ring
10	1	A-16497-01	Brine Stem Assembly
11	1	A-18713	Brine Valve Body, BV-180
12	1	A-11772	Spring, BV-180
13	1	A-11774	Retaining Ring
14	1	A-16498-01	Stem Guide Assembly
15**	1		BLFC, Button
16	1	A-60710	BLFC, Brine Fitting, BV-180

** BLFC Button Options	
A-17942	BLFC Washer, 5 gpm
A-17943	BLFC Washer, 8 gpm
A-17944	BLFC Washer, 9 gpm
A-16529	BLFC Washer, 10 gpm
A-16735	BLFC Washer, 12 gpm
A-16736	BLFC Washer, 15 gpm
A-16528	BLFC Washer, 20 gpm
A-16737	BLFC Washer, 25 gpm

*** Injectors	
A-15128-04	Injector Assy, #4C, Green (24" Tank)
A-15128-05	Injector Assy, #5C, Red (30" Tank)
A-15128-06	Injector Assy, #6C, White (36" Tank)
A-15128-07	Injector Assy, #7C, Blue (42" Tank)
A-15128-08	Injector Assy, #8C, Yellow (48" Tank)
A-15128-09	Injector Assy, #9C, Violet (54" Tank)
A-15128-10	Injector Assy, #10C, Black (60" - 63" Tank)

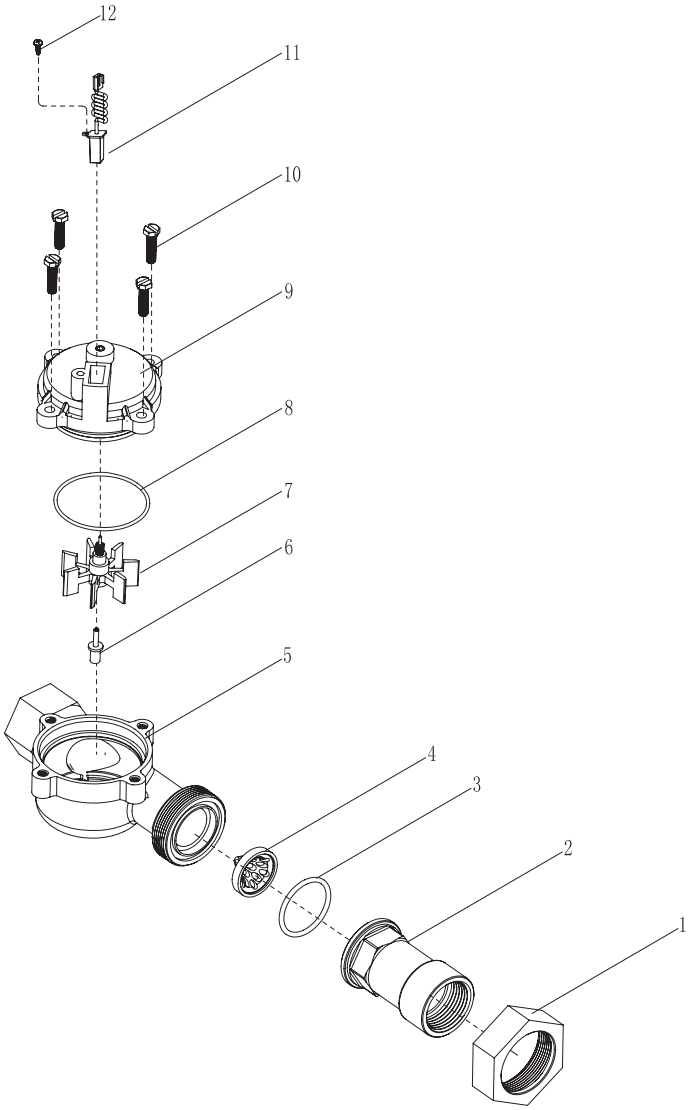

Item No.	Quantity	Part No.	Description
1	1	A-14962	Nut, Brass, Meter 1"
2	1	A-14961-10	Fitting, Brass, 1"
3	1	A-13287	O-ring, Meter, 1"
4	1	A-14960	Flow Straightener, Meter, 1"
5	1	A-14959-20	Meter Body, Brass, 1"
6	1	A-13882	Post, Meter Impeller, 1", 1.5" & 2", NX & Mechanical
7	1	A-13509	Impeller, Meter, AQT-275/285, 1", 1.5"
8	1	A-13847	O-ring, Meter Cover
9	1	A-14716	Meter Cover Assy, AQT-275/285/290/315, 1", 1.5", 2", NX Meter
10	4	A-12473	Screw, Meter Cover
11	1	A-19121-02	Meter Cable Assy
12	1	A-17798	Screw, Meter Cable Assy

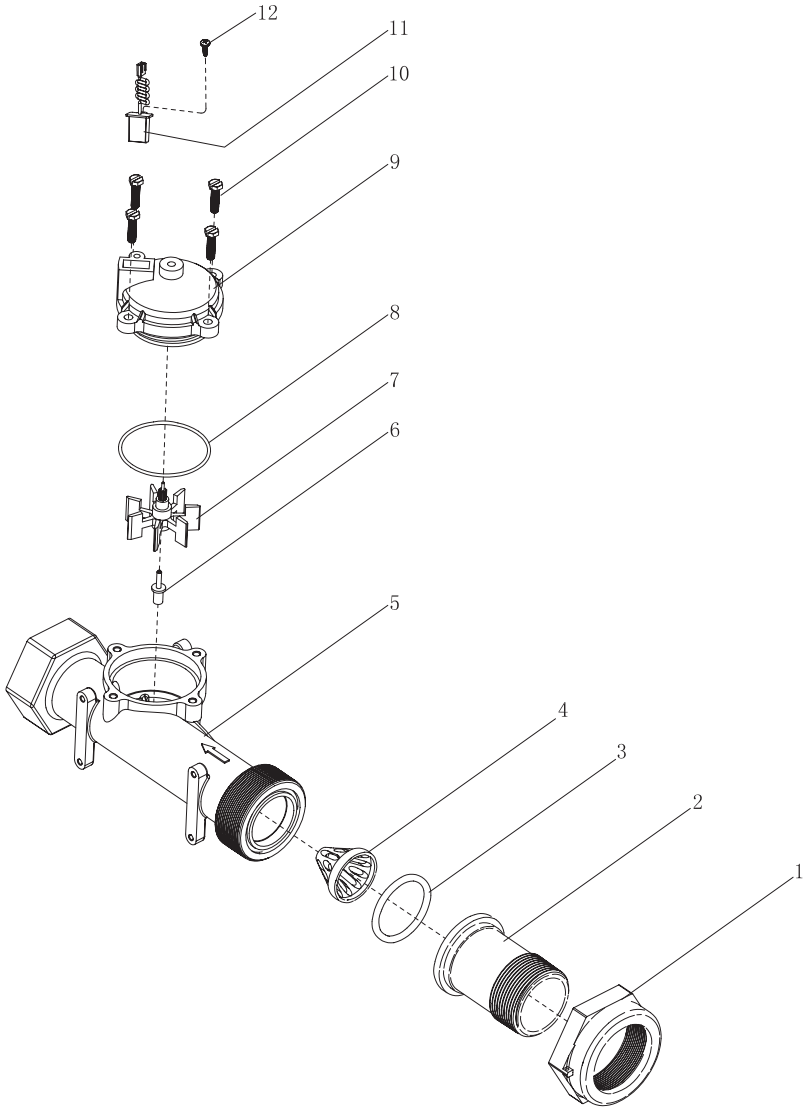

Item No.	Quantity	Part No.	Description
1	1	A-17543	Nut, Brass, Meter 1.5"
2	1	A-17544-10	Fitting, Brass, 1.5"
3	1	A-12733	O-ring, Meter, 1.5"
4	1	A-17542	Flow Straightener, Meter, 1.5"
5	1	A-17569-20	Meter Body, Brass, 1.5"
6	1	A-13882	Post, Meter Impeller, 1", 1.5" & 2", NX & Mechanical
7	1	A-13509	Impeller, Meter, AQT-275/285, 1", 1.5"
8	1	A-13847	O-ring, Meter Cover
9	1	A-14716	Meter Cover Assy, AQT-275/285/290/315, 1", 1.5", 2", NX Meter
10	4	A-12473	Screw, Meter Cover
11	1	A-19121-02	Meter Cable Assy
12	1	A-17798	Screw, Meter Cable Assy

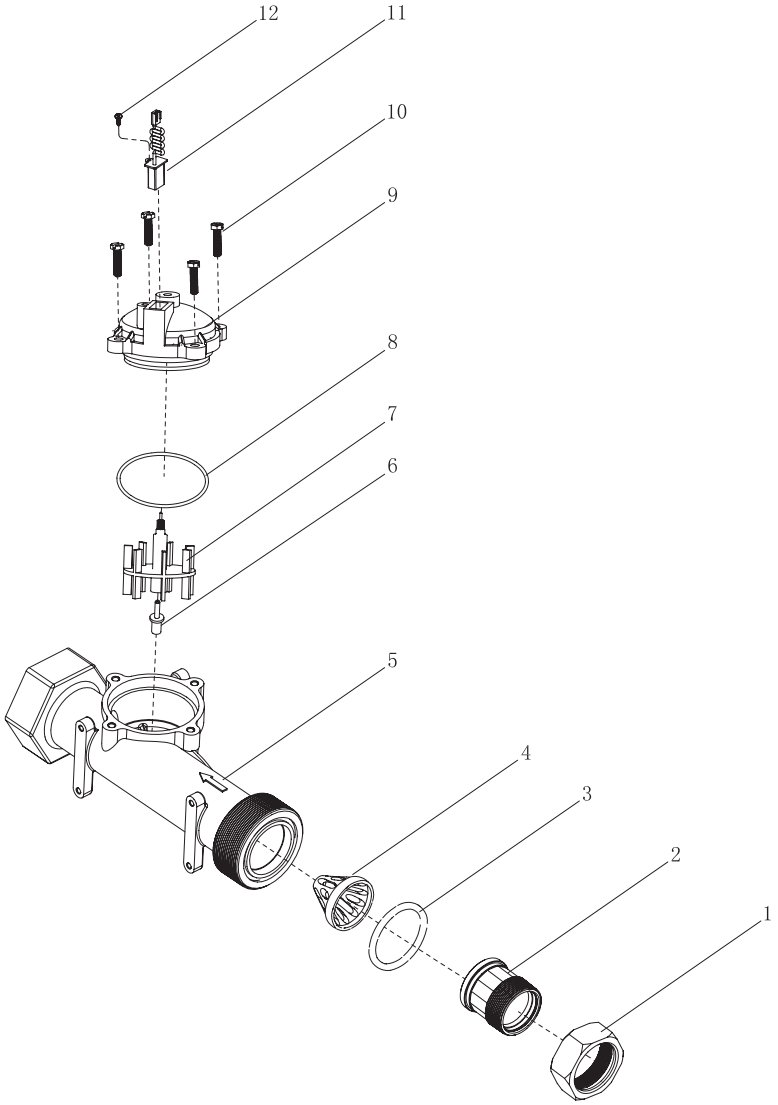

Item No.	Quantity	Part No.	Description
1	1	A-14569	Nut, Brass, Meter 2"
2	1	A-14568	Fitting, Brass, 2"
3	1	A-14679	O-ring, Meter, 2"
4	1	A-14680	Flow Straightener, Meter, 2"
5	1	A-14456	Meter Body, Brass, 2"
6	1	A-13882	Post, Meter Impeller, 1", 1.5" & 2", NX & Mechanical
7	1	A-15374	Impeller, Meter, AQT-290/315, 2"
8	1	A-13847	O-ring, Meter Cover
9	1	A-14716	Meter Cover Assy, AQT-275/285/290/315, 1", 1.5", 2", NX Meter
10	4	A-12473	Screw, Meter Cover
11	1	A-19121-02	Meter Cable Assy
12	1	A-17798	Screw, Meter Cable Assy

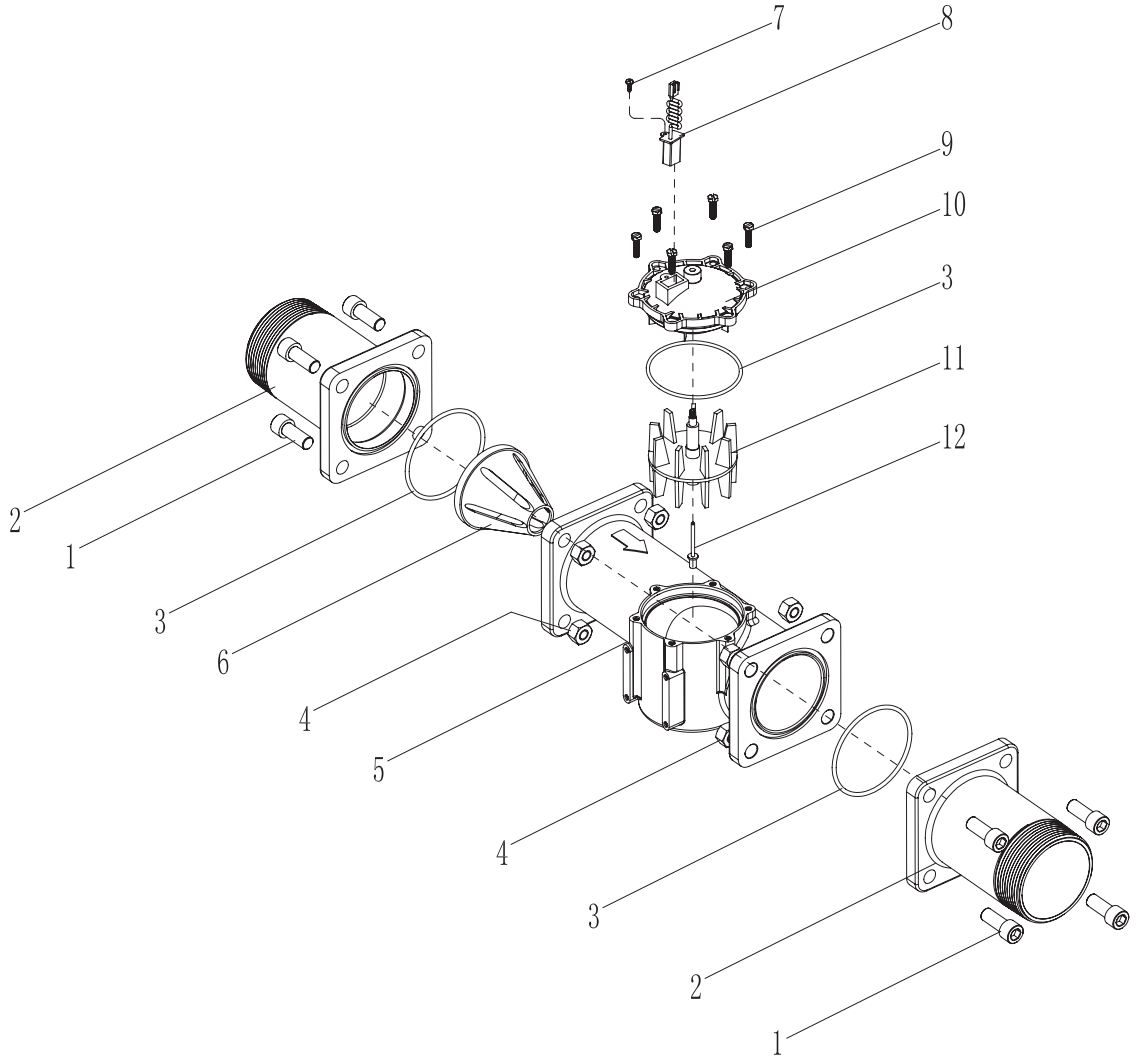

Item No.	Quantity	Part No.	Description
1	8	A-40118	Screw, Adapter
2	2	A-16328	Adpater, Brass, Meter, 3"
3	3	A-15707	O-ring, Meter, 3"
4	8	A-16386	Nut, Hex, Adapter
5	1	A-16254-20	Meter Body, Brass, 3"
6	1	A-16280	Flow Straightener, Meter, 3"
7	1	A-16279	Post, Meter Impeller, 3", NX & Mechanical
8	1	A-16575	Impeller, Meter, AQT-390, 3"
9	1	A-14716-01	Meter Cover Assy, AQT-390, 3", NX Meter
10	6	A-12473	Screw, Meter Cover
11	1	A-19121-02	Meter Cable Assy
12	1	A-17798	Screw, Meter Cable Assy

For Models:

AQT-275, AQT-285 and AQT-315

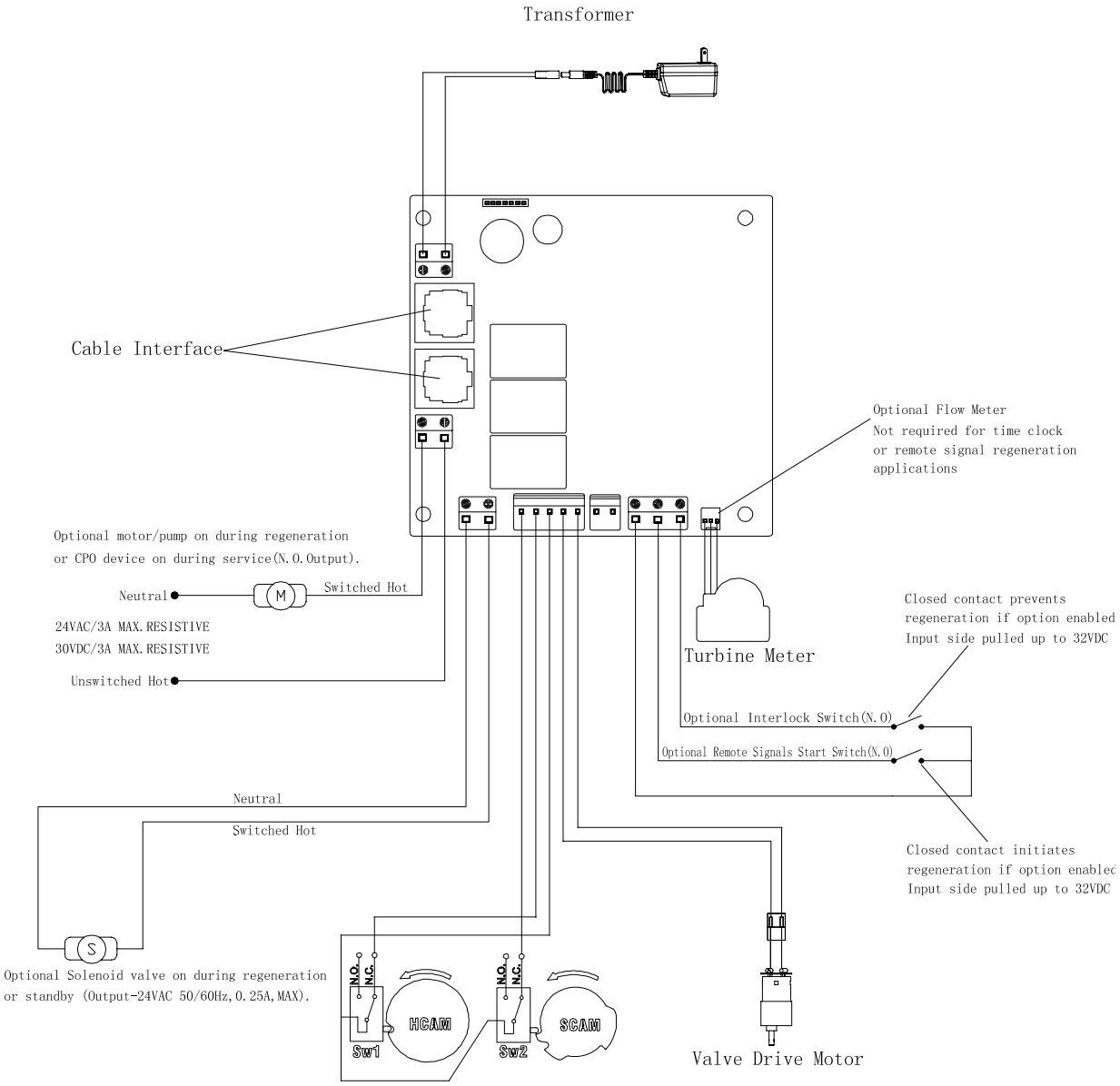

For Models:

AQT-290 and AQT-390

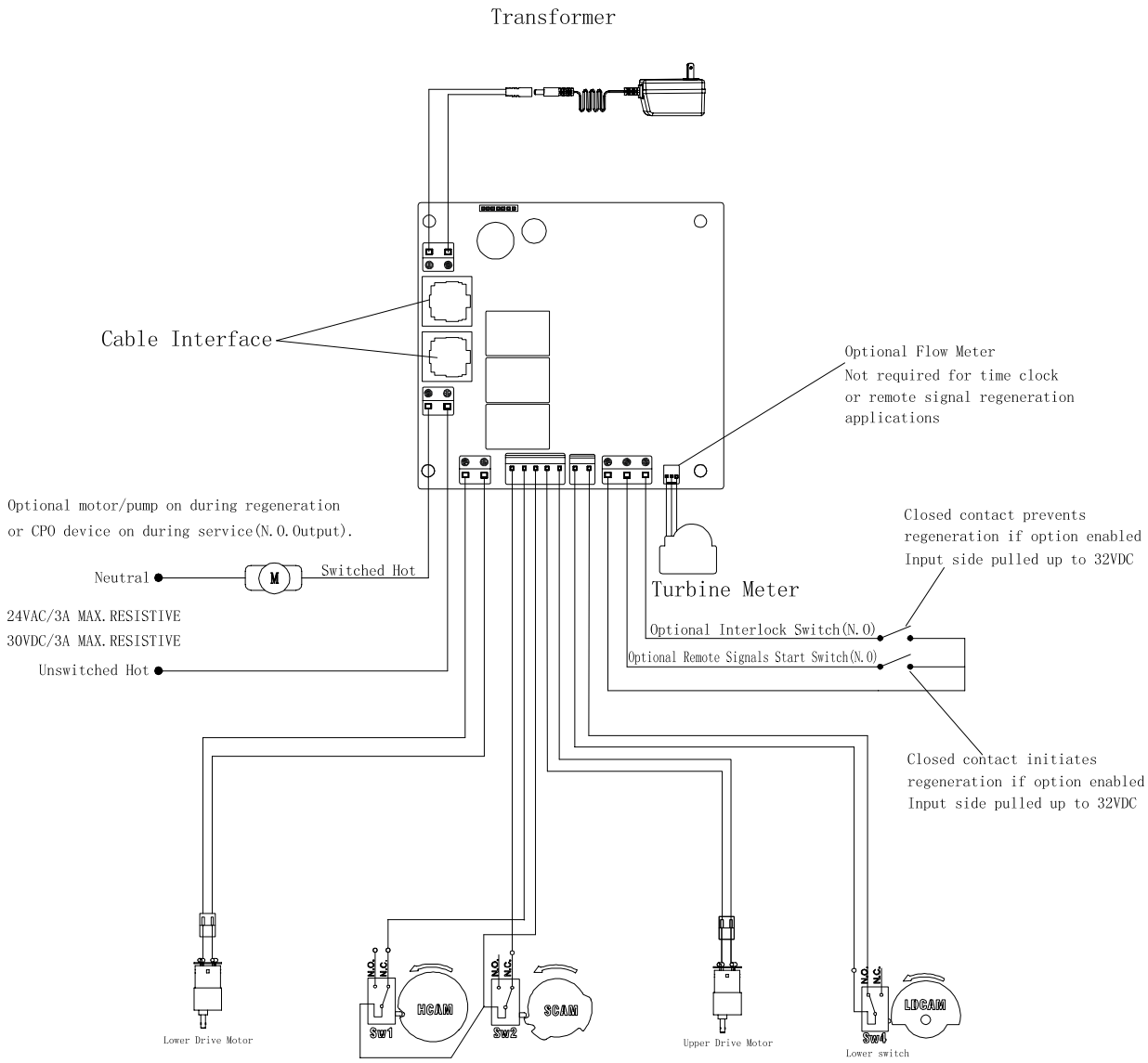

System	Valve Qty	Valve Needed	Meter	Function
4# Single Valve	1	Time	N/A	Regenerates by set time
		Meter Imm	1	Regenerates immediately when meter zeros out
		Meter Delayed	1	Regenerates delayed to the set time after meter zeros out
		Remote Signal Start	Optional	Regenerates starts by remote signal
5# Interlock	2-4	Meter Imm	All Meters	All units in service at the same time. When one meter zeros out or receives a remote signal, that unit starts regenerating. Other units remain in service even if they zero out during this time.
		Remote Signal Start	Optional	
6# Series	2-4	Meter Imm	1	All units in service at the same time. When system meter zeros out or receives remote start signal, the "lead" unit regenerates, others remain in service until the lead returns to service. The subsequent units regenerate as needed.
		Remote Signal Start	Optional	
7# Alternating	2	Meter Imm	1	One unit in service, the other one on stand-by. When meter zeros out or receives the remote start signal, the service one goes to regeneration and the stand-by one goes to service at the same time.
		Remote Signal Start	Optional	
9# Alternating	2-4	Meter Imm	All Meters	One unit on stand-by, all units in service. When one meter zeros out or receives the remote start signal, it goes to regeneration and the stand-by one goes to service at the same time.
		Remote Signal Start	Optional	

4# Single Unit

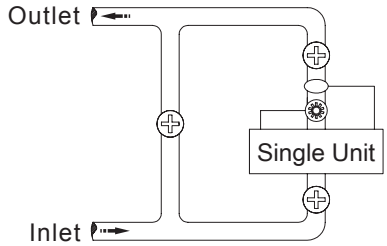

Note:
For system 7# and 9#, solenoid valve must be installed at the outlet for AQT-275, AQT-290, AQT-315. For dual piston AQT-290, AQT-390 this is not necessary. Optional solenoid valve for other systems.

System 5#、9#

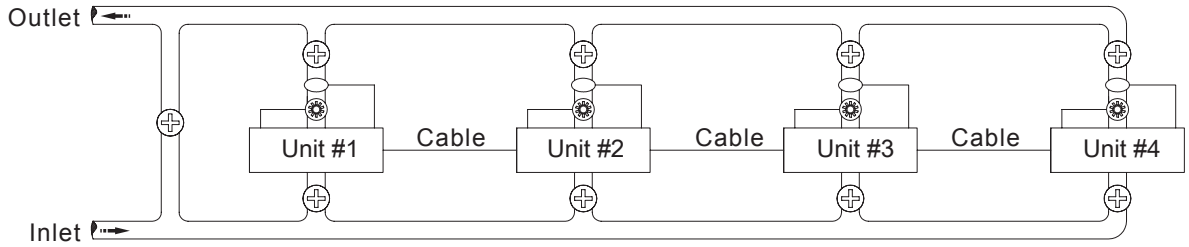

System 6#

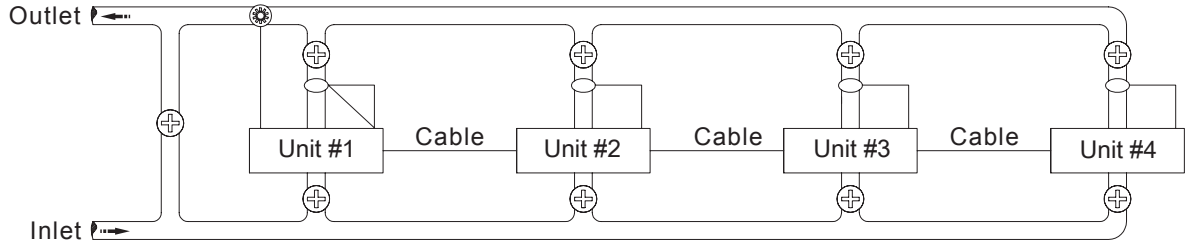

System 7#

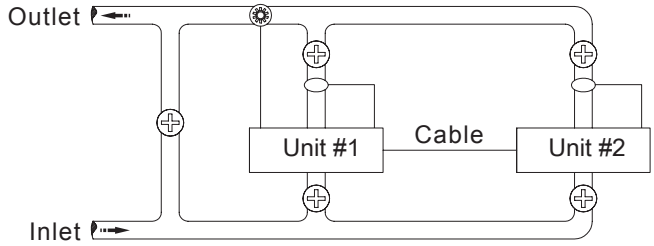

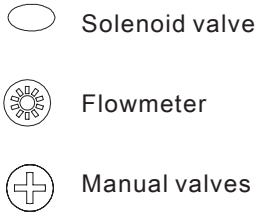

Problem	Cause	Correction
1) The control fails to Regenerate automatically	A) Disconnected meter cable	A) Reconnect the meter cable
	B) Transformer damaged	B) Replace the transformer
	C) Electronic controller or sensor damaged	C) Replace or repair
2) Regeneration at wrong time	A) Timer improperly set, due to power failure	A) Reset timer
3) loss of capacity	A) Increase draw water hardness	A) reset unit to the new capacity
	B) Brine concentration or quantity.	B) Keep brine tank full of salt at all times. Clean it yearly. Salt may be bridged. If using a salt grid Plate insure refill water is over it.
	C) Rinse fouling	C) Consolidate the rinse tank, clean the rinse and prevent future fouling
	D) Poor distribution, channeling (Uneven bed service).	D) Check distributors and backwash flow
	E) Internal control leak	E) Replace the spacer, seal or piston
	F) Ageing of rinse	F) Check for resin oxidation caused by Chlorine. Mushy resin.
	G) Loss of rinse	G) Check for correct bed depth. Broken distributors. Air or gas in bed: Well gas Eliminator loose brine line.
4) Poor water quality	A) Check items listed in Problem # 3.	A) Check items listed in Correction # 3.
	B) Bypass is open	B) Close the bypass
	C) Channeling	C) Check for too slow or high service flow
5) Excessive salt use	A) High salt setting	A) adjust salt setting
	B) Excessive water in brine tank	B) refer to problem # 7 tank.
6) Loss of water pressure	A) Fouling of inlet pipe	A) Clean or replace the pipeline
	B) Fouled resin	B) Clean the resin. Pretreat to prevent
	C) Improper backwash	C) Too many resin fines. Reset the flow rate and time of backwash
7) Excessive water in brine tank	A) Plugged drain line	A) Check drain line and clean flow control
	B) Brine valve plugged or damaged	B) Clean or replace the brine valve
	C) Injector plugged	C) Clean injector, replace injector screen
	D) Low inlet water pressure	D) Increase water pressure to allow Injector to perform properly
8) Softener fails to brine draw	A) Plugged drain line	A) Clean drain line and flow control
	B) Plugged injector	B) Clean or replace the injector and screen
	C) No water in the brine tank	C) Check for restriction in B.L.FC. Ensure Safety float is not stuck
	D) Low water pressure	D) Increase water pressure
	E) Brine line injects air during brine draw	E) Check brine line for air leaks
	F) Internal control leak	F) Check seal, spacer and piston for scratches and dents
9) Control cycles continuously	A) Faulty timer	A) Replace timer
10) Continuous flow to drain	A) Foreign material in the control	A) Call dealer. Clean valve, rebuild unit
	B) Internal control leak	B) Same as above
	C) Piston jammed in brine or back wash position	C) Same as above

Error	Cause	Solution
DETECTED ERROR RESET UNIT	User resume factory setting	Press shift button and up button simultaneously, go through the master programming to program the unit, press cycle button to save and exit
DETECTED ERROR NO MESSAGE #1	No message #1	1) Make sure all communication cables are connected 2) Keep the same format for the lead unit and the lag unit 3) Confirm there is unit 1# or 2# or 3# set in the system 4) The number of the control used should comply with the number set in the system 5) There shouldn't be any same valve address in the system
DETECTED ERROR NO MESSAGE #2#3#4	No message #2, #3, #4	
DETECTED ERROR NO MESSAGE #2	No message #2	
DETECTED ERROR NO MESSAGE #3	No message #3	
DETECTED ERROR NO MESSAGE #4	No message #4	
DETECTED ERROR NO MESSAGE #2#3	No message #2, #3	
DETECTED ERROR NO MESSAGE #2 #4	No message #2, #4	
DETECTED ERROR NO MESSAGE #3#4	No message #3, #4	
DETECTED ERROR DIFFERENT FORMAT	In system 7, lead unit and lag unit setting of different format	Enter the system setting and reset the format for system 7#

www.aquatroltech.com

AQUATROL™
CONTROL VALVES

AQUATROL | P.O. Box 2235 Chino Hills, CA 91709 • USA

LIT-AQT-NX-MAN 10/02/20